· AGP Pellet Stove ·

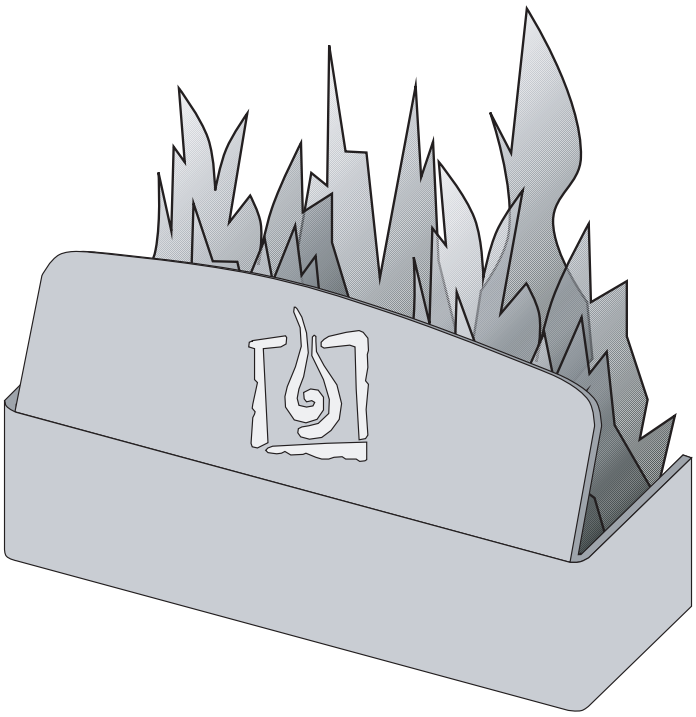

TRAVIS INDUSTRIES
HOUSE OF FIRE

- ***Horizontal or Vertical Vent***
- ***Freestanding Stove***
- ***Mobile Home Approved***
- ***Class A Chimney Retrofit***
- ***Hearth Stove into Existing Masonry Chimney , Masonry Fireplace, or Z.C. Fireplace***

-- Please read this entire manual before installation and use of this pellet fuel-burning room heater. Failure to follow these instructions could result in property damage, bodily injury, or even death.

-- Contact local building or fire officials about restrictions and installation inspection requirements in your area.

-- Save these instructions.

Tested and Listed by:
Intertek
ASTM E1509-4 ULC-S627

Installer: After installation give this manual to the home-owner and explain operation of this stove.

Consumer: Retain this manual for future reference.

$10.00
© Copyright 2016, T.I.
Part # 100-01270 9/28/17

Travis Industries, Inc.

www.travisproducts.com
12521 Harbour Reach Drive SW
Mukilteo, WA 98275

Introduction

We welcome you as a new owner of an AGP pellet stove. In purchasing an AGP pellet stove you have joined the growing ranks of concerned individuals whose selection of an energy system reflects both a concern for the environment and aesthetics. The AGP pellet stove is one of the finest home heaters the world over. This manual will explain the installation, operation, and maintenance of this pellet-burning heater. Please familiarize yourself with this Owner's Manual before operating your heater and save the manual for future reference. Included are helpful hints and suggestions which will make the installation and operation of your new heater an easier and more enjoyable experience. We offer our continual support and guidance to help you achieve the maximum benefit and enjoyment from your heater.

Important Information

No other AGP pellet stove has the same serial number as yours. The serial number is on the safety label on the back of the appliance.

This serial number will be needed in case you require service of any type.

Model: AGP PS

Serial Number: _____

Purchase Date: _____

Purchased From: _____

_____

_____

Mail your Warranty Card Today, and Save Your Bill of Sale.

To receive full warranty coverage, you will need to show evidence of the date you purchased your heater. Do not mail your Bill of Sale to us.

We suggest that you attach your Bill of Sale to this page so that you will have all the information you need in one place should the need for service or information occur.

NATIONAL FIREPLACE INSTITUTE NFI CERTIFIED www.nficertified.org

We suggest that our pellet hearth products be installed and serviced by professionals who are certified in the U.S. by the National Fireplace Institute® (NFI) as NFI Pellet Specialists or who are certified in Canada by Wood Energy Technical Training (WETT).

Wood Energy Technical Training www.wettinc.ca

Table of Contents

Introduction 2
Important Information 2
Heating Specifications 7
Dimensions 7
Electrical Specifications 7
Fuel 7
Emissions 7
Efficiency 7
Before You Begin 8
Packing List 8
Items Required 8
Installation Options 8
Planning the Installation 9
Stove Placement 9
Floor Protection Requirements 9
Electrical Requirements 9
Clearances 10
- Straight Installations 10
- Corner Installations 10

Venting the Pellet Stove 11
- Maximum Venting Distance 11
- Pellet Vent Type 12
- Installing the Pellet Vent 12
- Pellet Vent Termination 12

Mobile Home Requirements 13
Outside Air (Used for Combustion – Use Part #99200136) 13
Alcove Installation Requirements 14
Restrictor Adjustment 14
Installation Examples 15
- Installation Example: Direct "Through-the-wall" Installation 15
- Installation Example: Interior Vertical Installation 16
- Installation Example: Class “A” Chimney Retrofit 17
- Installation Example: Masonry Fireplace Hearth Stove 18
- Installation Example: Zero-Clearance (Metal) Fireplace Hearth Stove 19
- Installation Example: Freestanding Masonry Chimney 20

Safety Notice 21
Location of Controls 21
Loading Pellets 22
Starting the Heater for the First Time 22
- Curing the Paint 22

Manual Mode 23
  - To Start 23
  - To Shut Down 23
  - To Adjust the Heat 23
  - To Adjust Heat Output 24
  - Auto-Fan 24

TSTAT (Thermostat) Mode 25
  - To Start the Stove in TSTAT Mode 25
  - To Adjust the Heat Output 25
  - To Shut Down 25
- Changing the TSTAT Program 26
  - How to Tell Which TSTAT Program You Are In 26
  - Switching Between Program 1, 2, and 3 26
  - Thermostat Program 1 26
  - Thermostat Program 2 26
  - Thermostat Program 3 26

Start-Up Sequence (Igniter) 27
Power Outages 27
  - Manual Mode 27
  - TSTAT Mode 27

Stove Maintenance 28
- Maintenance Schedule 28
- Removing Flyash 28
- Disposal of Ashes 28
- Stove Maintenance Tools 29
  - Stove Tool Storage 29
- Opening the Door 29
- Weekly Maintenance (or Every 5 Bags of Pellets) - Inspect the Burn 30
- Weekly Maintenance (or Every 5 Bags of Pellets) - Clean the Fire Platform 30
- Weekly Maintenance (or Every 5 Bags of Pellets) - Clean the Heat Exchange Tubes 33
- Cleaning Behind the Firebox Liners 34
- Monthly Maintenance (or Every 20 Bags of Pellets) - Clean the Glass 35
- Monthly Maintenance (or Every 20 Bags of Pellets) – Empty the Ashpan 36
- Yearly Maintenance (or Every Ton of Pellets) - Clean the Lower Exhaust Duct 37
- Yearly Maintenance (or Every Ton of Pellets) - Clean the Convection Blower 39
- Yearly Maintenance (or Every Ton of Pellets) - Clean the Negative Pressure Tube 40
- Yearly Maintenance (or Every Ton of Pellets) - Clean the Vent 40
- Yearly Maintenance (or Every Ton of Pellets) - Adjust the Door Cam 41
- Yearly Maintenance (or Every Ton of Pellets) - Check for Air Leaks Around the Door, Glass, and Ashpan 41

Troubleshooting Table 42
Replacement Parts 42
- Door Parts 42

Wiring Diagram 43
Thermostat Installation (Optional) 44
Outside Air Kit 44

Safety Precautions

HOT WHILE IN OPERATION. KEEP CHILDREN, CLOTHING, AND FURNITURE AWAY. CONTACT MAY CAUSE SKIN BURNS.

Educate all children of the danger of a high-temperature heater. Young children should be supervised when they are in the same room as the heater.

Do not operate the heater if you smell smoke coming from the heater. Press the “STOP” button, monitor your heater, and call your dealer.

Do not unplug the heater if you suspect a malfunction. Press the “STOP” button and periodically inspect the heater.

Do not alter this appliance in any way

Never try to repair or replace any part of the heater unless instructions are given in this manual. All other work should be done by a trained technician.

Do not alter this appliance in any way.

This unit must be properly installed to prevent the possibility of a house fire. The instructions must be strictly adhered to. Do not use makeshift methods or compromise in the installation.

Contact your local building officials to obtain a permit and information on any installation restrictions or inspection requirements in your area. Notify your insurance company of this appliance as well.

Never use gasoline, gasoline-type lantern fuel, kerosene, charcoal lighter fluid, or similar liquids to start or “freshen up” a fire in this heater. Keep all such liquids well away from the heater while it is in use.

Do not store solid fuel or place such fuel within heater installation clearances or within the space required for charging and ash removal.

Ashes should be placed in a metal container with a tight-fitting lid. The closed container of ashes should be placed on a noncombustible floor or on the ground, well away from all combustible materials, pending final disposal. If the ashes are disposed of by burial in soil or otherwise locally dispersed, they should be retained in the closed container until all cinders have been thoroughly cooled.

The viewing door and ashpan must be closed and latched during operation.

This heater is designed and approved for pelletized wood fuel only.

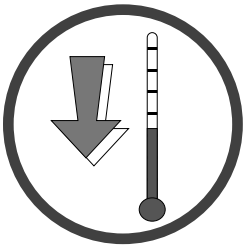

Allow the appliance to cool completely before carrying out any maintenance or cleaning.

Maintain the door and glass seal and keep them in good condition.

Do not operate this heater with broken or missing glass.

Do not slam the door or strike the glass.

Notify your dealer to replace the glass if glass on this appliance is broken or damaged.

Do not operate the heater if the flame becomes dark and sooty or if the fire platform overfills with pellets. Press the “STOP” button and periodically inspect the heater.

Do not place clothing or other flammable items on or near this appliance.

The heater will not operate during a power outage.

This heater must be connected to a standard115 V., 60 Hz grounded electrical outlet. Do not use an adapter plug or sever the grounding plug. Do not route the electrical cord underneath, in front of, or over the heater.

Keep foreign objects out of the hopper.

The exhaust system must be completely airtight and properly installed. The pellet vent joints must be sealed with RTV 500° F. (260° C.) silicone sealant.

Your heater requires periodic maintenance and cleaning (see "Stove Maintenance"). Failure to maintain your heater may lead to accumulation of soot, creosote, and ash, and smoke spillage or fire in your home.

When installed in a mobile home, the heater must be bolted to the floor, have outside air, and NOT BE INSTALLED IN THE BEDROOM (per H.U.D. requirements). Check with local building officials.

Safety Precautions

Do not throw this manual away. This manual has important operating and maintenance instructions that you will need at a later time. Always follow the instructions in this manual.

Disconnect the power before performing any maintenance.

The exhaust system should be checked at least twice a year for any build-up of soot or creosote.

Travis Industries, Inc. grants no warranty, implied or stated, for the installation or maintenance of your appliance, and assumes no responsibility of any consequential damage(s).

DO NOT INSTALL A FLUE DAMPER IN THE EXHAUST VENTING SYSTEM OF THIS UNIT.

DO NOT CONNECT THIS UNIT TO A CHIMNEY FLUE SERVING ANOTHER APPLIANCE.

INSTALL VENT AT CLEARANCES SPECIFIED BY THE VENT MANUFACTURER.

***Soot and Flyash: Formation and Need for Removal* – The products of combustion will contain small particle of flyash. The flyash will collect in the exhaust venting system and restrict the flow of the flue gases. Incomplete combustion, such as occurs during startup, shutdown, or incorrect operation of the room heater will lead to some soot formation which will collect in the exhaust venting system. The exhaust venting system should be inspected at least twice every year to determine if cleaning is necessary.**

NEVER USE SUBSTITUTE MATERIALS FOR ANY PURPOSE ON THIS APPLIANCE.

Establish a routine for fuel, wood burner and firing technique. Check for creosote build-up daily until you know how often to clean the appliance for safe operation. Be aware that the hotter the fire, the less creosote is deposited, and weekly cleaning may be necessary in mild weather even though monthly cleaning may be enough in the coldest months. Contact your municipal or provincial fire authority for information on how to handle a chimney fire. Have a clearly understood plan in place for how to handle a chimney fire.

Do not burn this stove if unburned pellets are in the ashpan. These should be removed as they may ignite.

Smoke and CO Detectors: Make sure your home has a working smoke detector, especially near any bedrooms. We recommend having a smoke and/or CO detector in the same room as the wood heater for additional safety.

Proposition 65 Warning: Fuels used in gas, woodburning or oil fired appliances, and the products of combustion of such fuels, contain chemicals known to the State of California to cause cancer, birth defects and other reproductive harm.
California Health & Safety Code Sec. 25249.6

U.S. and Foreign Patents Pending.

Heating Specifications

Approximate Maximum Heating Capacity (in square feet)*	800 to 2,000 Sq. Feet
BTUs	11,480 to 41,000 **
Burn Rate (Pounds per Hour)***	1.4 to 5
Maximum Burn Time on Low Burn***	57 Hours
Hopper Capacity	80 Pounds
Turn-Down Ratio	72%

* Heating capacity will vary depending on the home's floor plan, degree of insulation, and the outside temperature. It is also affected by the fuel size, quality, and moisture level.

** Based on 8,200 BTUs per pound.

*** Small pellet size will decrease the stated burn rates and burn times. Differences of plus or minus 20% depending on fuel quality may occur.

Dimensions

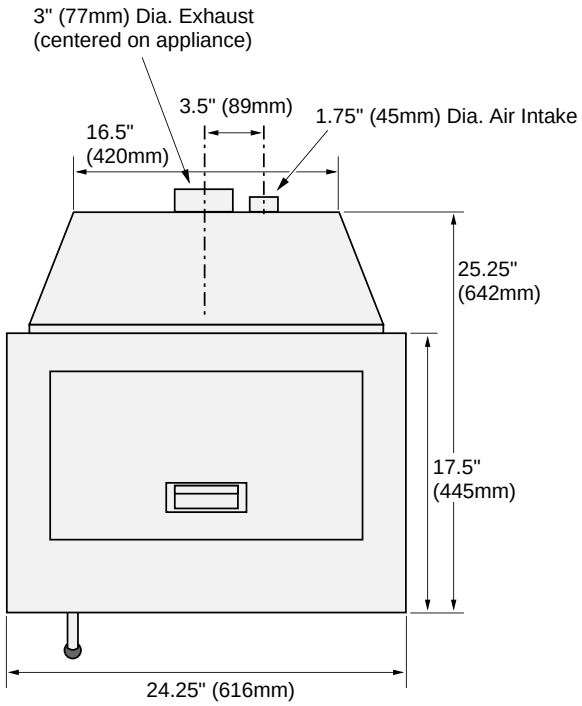

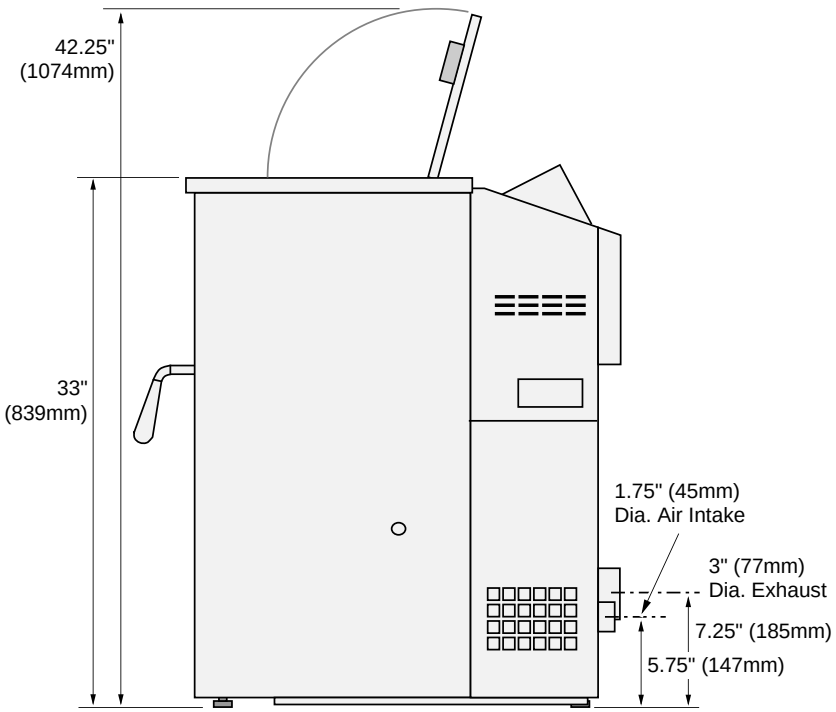

Electrical Specifications

Electrical Rating	115 Volts, 3 Amps, 60 Hz
Watts during Start-Up Sequence	350 (approximately)
Watts during Operation	250 (approximately)

Fuel

This heater is designed and approved for pelletized wood fuel only (all grades).

Emissions

This heater meets the 2015 U.S. EPA's pelletized wood emission limits for pellet stoves sold after May 15, 2015. Tested to Method 28, 5G2 this heater has been shown to deliver heat at rates ranging from 9,500 to 33,000 BTU/hr and an emission value of 0.67g/h.

Efficiency

This model was not tested for efficiency however it is assigned a default efficiency of 78% by the EPA under previous subpart AAA.

Before You Begin

READ THIS ENTIRE MANUAL BEFORE YOU INSTALL AND USE THIS HEATER. FAILURE TO FOLLOW THE INSTRUCTIONS MAY RESULT IN PROPERTY DAMAGE, BODILY INJURY, OR EVEN DEATH.

Check with local building officials for any permits required for installation of this pellet heater and notify your insurance company before proceeding with installation.

Packing List

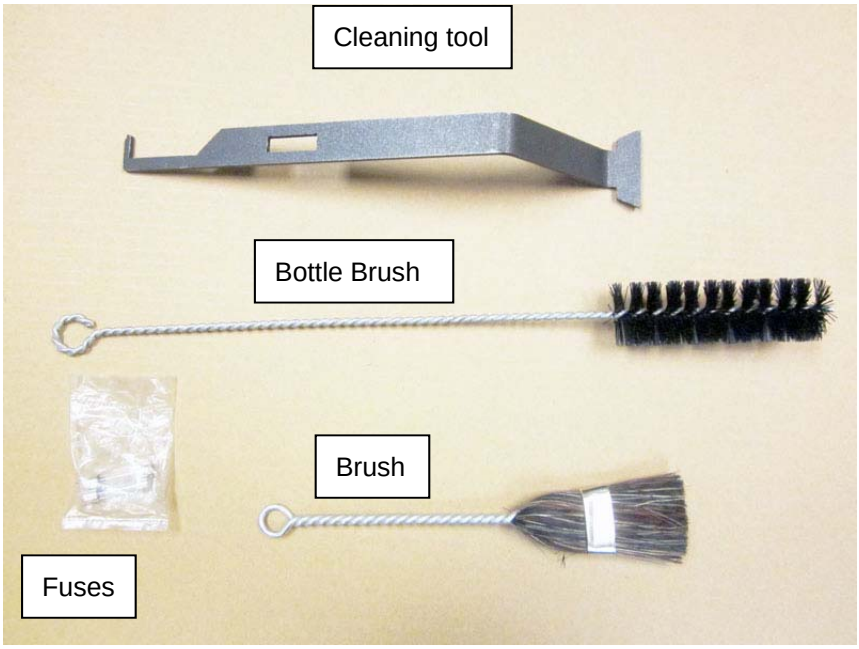

Burn Platform Wedge

Items Required

- AGP Pellet Stove Side Panels (SKU 94400024, 94400025, or 94400026)

Installation Options

- Residential or Mobile Home (see the section "Mobile Home Requirements")
- Alcove Compatible (see the section "Alcove Installation")
- Horizontal or Vertical Vent
- Outside Air Compatible
- Vent with L-Vent, L-Vent Fireplace Liner, or Type “A” Chimney (with adapter)

Planning the Installation

HINT: Have an authorized Travis Industries dealer install this heater. If you install the heater yourself, have your dealer review your installation plans.

HINT: Sketch out a detailed plan of the installation including dimensions. Then verify the dimensions with the requirements listed in this manual.

HINT: When determining the location of the stove, locate the wall studs (for horizontal penetrations) and ceiling trusses (for vertical penetrations). You may wish to adjust the stove position slightly to ensure the vent does not intersect with a framing member.

The location of your wood heater in your home will decide how affectively the heat produced will spread throughout your house. Attention to the home design with consideration of natural convection and air circulation should be taken into account when choosing the placement of your heater within the home.

Stove Placement

- Stove must be placed so that no combustibles are within, or can swing within (e.g. drapes, doors), 36" (915mm) of the front of the heater.
- If the stove is placed in a location where the ceiling height is less than 7' (2.134 M), it must follow the requirements in the section "Alcove Installation Requirements".

HINT: REDUCING CLEARANCES - Clearances may be reduced by methods specified in NFPA 211, listed wall shields, pipe shields, or other means approved by local building or fire officials.

- Heater and floor protection must be installed on a level, secure floor.

Floor Protection Requirements

- The heater must be installed on a non-combustible floor protector extending the full width and depth of the heater and extending 6" (153mm) in front (minimum .018" thick - 26 gauge).
- Must extend under and 2" (51mm) to each side and rear of a "Tee" (if used).

Electrical Requirements

- This heater **requires** a standard 120 volt, 60 Hz **grounded** electrical outlet. Do not use an adapter plug or sever the grounding plug.
- This heater **requires correct polarity**. The line (hot) is on the right and has a smaller plug. The neutral (common) is on the left and has a larger plug. Use a circuit tester (available at hardware stores) or contact an electrician to verify correct polarity and ground.

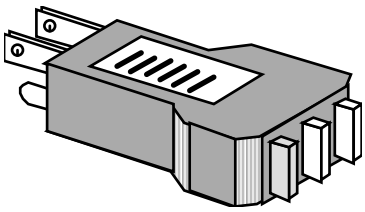

WARNING: Connection to a reverse polarity or un-grounded circuit may damage your heater's circuit board. This may cause a safety hazard, improper operation, and void your warranty.

- Do not route the electrical cord underneath, in front of, or over the heater.

Clearances

Straight Installations

Through the Wall Installations

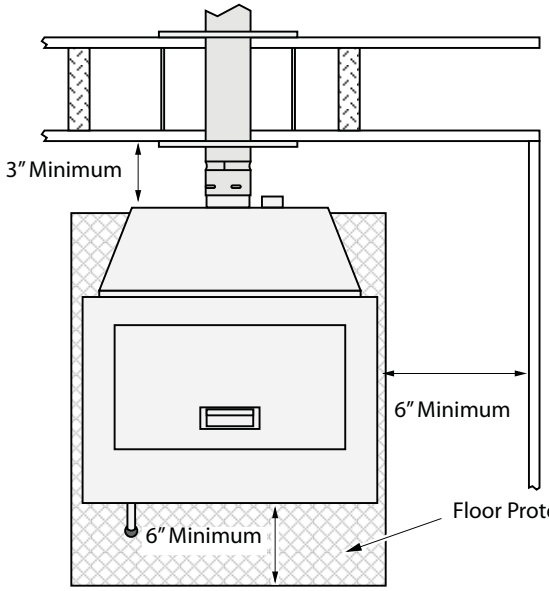

Interior Vertical Vents

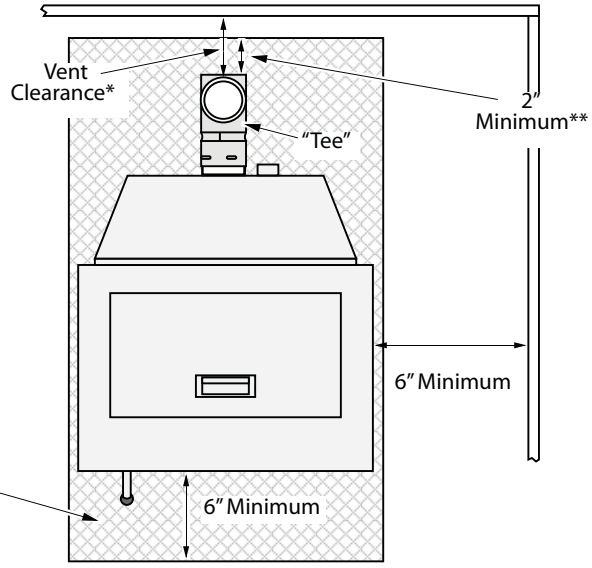

Floor Protection

Corner Installations

Through the Wall Vents

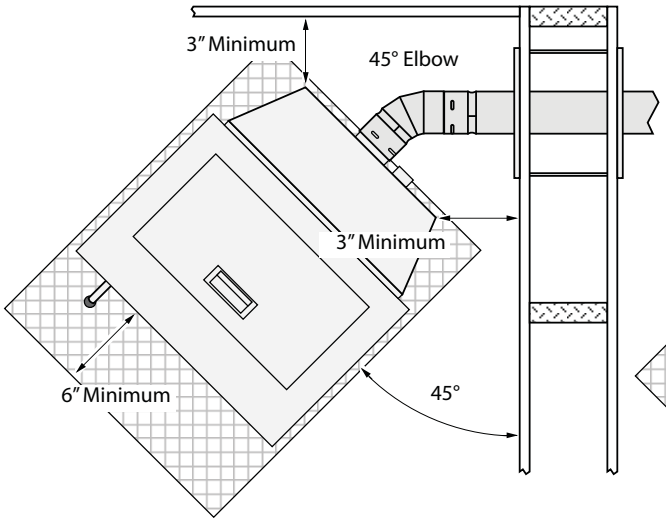

Interior Vertical Vents

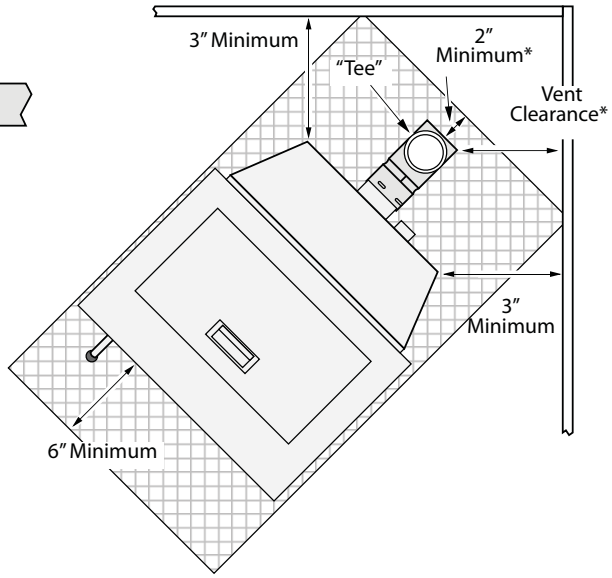

* **Install the vent at the clearance specified by the vent manufacturer.**

NOTE: If an interior vertical vent is used, the stove to backwall dimension is determined by the vent being used. This dimension will vary depending on the brand of pellet vent used. To determine the distance from the backwall to the stove, connect the "Tee" and add the vent clearance.

** The floor protection must extend 2" (51mm) beyond the pipe – all vent clearances must be met.

Venting the Pellet Stove

- **INSTALL VENT AT CLEARANCES SPECIFIED BY THE VENT MANUFACTURER.**
- **DO NOT CONNECT THE PELLET VENT TO A VENT SERVING ANY OTHER APPLIANCE OR STOVE.**
- **DO NOT INSTALL A FLUE DAMPER IN THE EXHAUST VENTING SYSTEM OF THIS UNIT.**
- **USE AN APPROVED WALL THIMBLE WHEN PASSING THE VENT THROUGH WALLS AND A CEILING SUPPORT/FIRE STOP SPACER WHEN PASSING THE VENT THROUGH CEILINGS (MAKE SURE TO MAINTAIN CLEARANCE TO ANY COMBUSTIBLES).**
- No more than one tee and 180° of elbows (one tee with two 90° elbows, one tee with one 90° and two 45° elbows, etc.).

Maximum Venting Distance

- Vent must have a support bracket every 5' (1.524 M) of pellet vent when on exterior of structure.

  NOTE: Travis Industries recommends a minimum vertical vent of 5' to ensure adequate draft during a power outage.

The vent height and run must not exceed the distance shown in the shaded region shown to the right.

Venting into this shaded area may require restrictor adjustments. See the section "Restrictor Adjustment" for details.

NOTE: To achieve optimum performance, we recommend keeping the vent as short as possible (horizontal run especially).

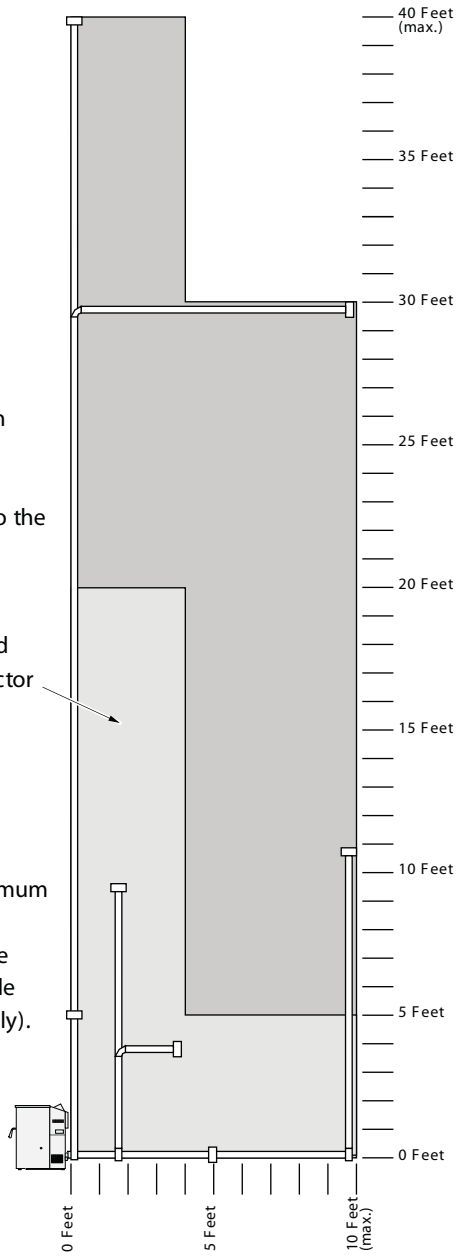

Pellet Vent Type

- Must be 3" (76mm) or 4" (102mm) diameter Type "L" (except for masonry fireplace installations) - or - connect the vent to a factory built type "A" chimney. All vent joints (including adapters, elbows, etc.) must be sealed (typically 500° F. RTV silicone is used).

Installing the Pellet Vent

Seal each vent section (including adapters, elbows, etc...) by injecting a liberal amount of 500° F. RTV silicone into the gap between sections.

Install the vent at the clearance specified by the vent manufacturer.

- Horizontal sections must have a 1/4" (6.4mm) rise every 12" (305mm) of travel.
- Pellet vent connections must be sealed airtight with 500° F. RTV silicone and screwed together with at least 3 sheet metal screws (unless the vent manufacturer's requirements specify otherwise).

Pellet Vent Termination

- Vent must terminate on the exterior of the dwelling. Horizontal terminations must protrude a minimum of 12" (305mm) from the wall. Vertical terminations must protrude a minimum 24" (610mm) from the roof surface. In addition, all clearances listed below must be met.
- Must have an approved cap (to prevent water from entering) or a 45° downturn with rodent screen.
- If the termination is located on a windy side of the house, an approved house shield is recommended to prevent soot from building up on the side of the house.
- Must not be located where it will become plugged by snow or other material.

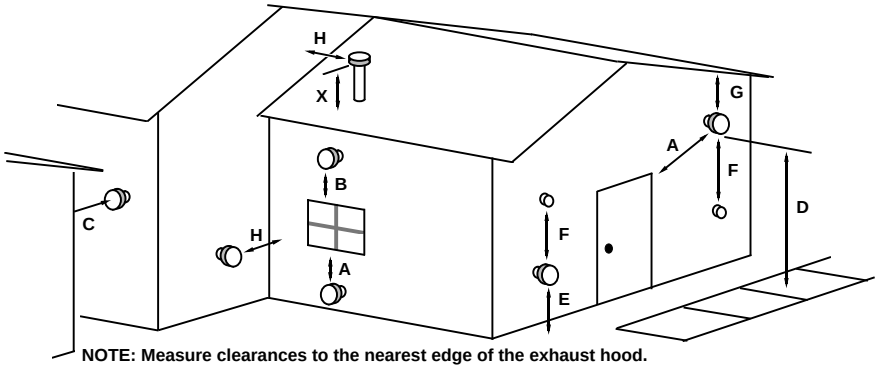

NOTE: Measure clearances to the nearest edge of the exhaust hood.

A Minimum 4' (1220mm) clearance below or beside any door or window that opens. (This clearance may be reduced to18" if using outside air (see page 13) – we recommend the door or window be kept closed during operation.
Minimum 1' (458mm) clearance below or beside any window that does not open.

B Minimum 1' (458mm) clearance above any door or window that opens

C Minimum 2' (610mm) clearance from any adjacent building

D Minimum 7' (2.134 M) clearance above any grade when adjacent to public walkways

NOTE: Vent may not terminate in covered walkway or breezeway.

E Minimum 2' (610mm) clearance above any grass, plants, or other combustible materials

F Minimum 3' (915mm) clearance from any forced air intake of any other appliance

G Minimum 2' (610mm) clearance below eaves or overhangs

H Minimum 1' (458mm) clearance horizontally from combustible wall

X Must be a minimum of 2' (610mm) above the roof

Mobile Home Requirements

- Outside air is required (used for combustion) - see the directions below.
- The heater must be bolted to the floor (Some states do not require this; check with your local building department).
- The heater must be grounded to the steel chassis of the mobile home (Some states do not require this; check with your local building department).

DO NOT INSTALL IN SLEEPING ROOM.

CAUTION: **THE STRUCTURAL INTEGRITY OF THE MANUFACTURED HOME FLOOR, WALL, AND CEILING/ROOF MUST BE MAINTAINED.**

Outside Air (Used for Combustion – Use Part #99200136)

Travis Industries strongly recommends outside air for all installations, especially for those with relatively air-tight homes or with vents that do not include vertical rise.

- Must not be drawn from an enclosed space (garage, unventilated crawl space).
- Must not be over 48" (1220mm) long
- Must be made with 1-¾" (45mm) diameter or larger metal or aluminum duct with a metal screen attached to the end to keep out rodents (P.V.C. or other combustible materials may not be used). We recommend the Travis Industries Outside Air Kit (part # 99200136).
- Must not terminate above or within 1' (305mm) of the chimney termination.
- Must have a rain cap or down-turned elbow to prevent water from entering.
- Must be located so that it will not become plugged by snow or other material.

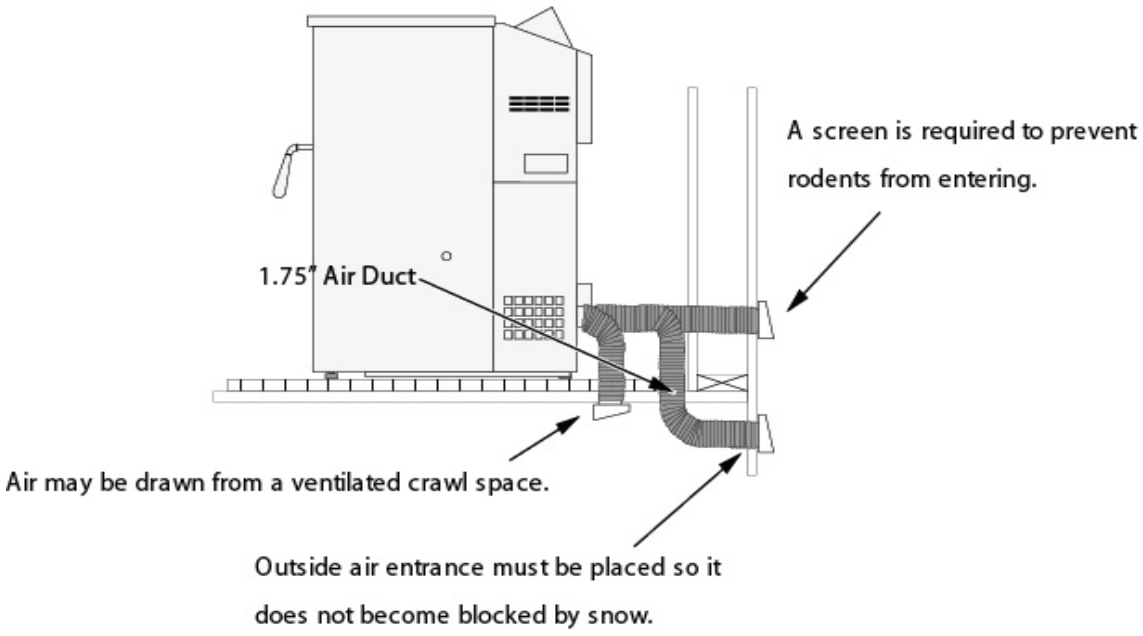

Alcove Installation Requirements

When the pellet stove is placed in a location where the ceiling height is less than 7' (2.134 M) tall, it is considered an alcove installation. Because of the reduced height, the requirements listed below must be met.

- Minimum height is 60"
- Minimum width is 36-9/16"
- Maximum depth is 48"
- Minimum clearance of 6" on each side and 3" on back
- Minimum clearance of 3” for horizontal venting
- Minimum clearance of 2” from pipe for vertical venting

Restrictor Adjustment

For installations with a tall flue, the restrictor may be needed to adjust airflow to the fire platform. This keeps the fire platform and glass as clean as possible.

For low heat output settings the restrictor may need to be closed or near closed to limit the amount of air. This prevents the stove from burning the pellet fuel faster than it is fed.

For medium heat output settings the restrictor may need to be opened to a medium position.

For high heat output settings the restrictor will need to be opened to a high position. This prevents the fire platform from over-filling with pellets and becoming clogged with ash clumps.

Keeping your fire platform clean is the most important step to maintaining a safe and efficient stove. Check and clean your fire platform daily until you find the correct restrictor settings and appropriate fire platform cleaning interval.

Not Enough Air

If clinkers (ashes that solidify into a clump) develop or the flame appears lazy and slow to blow the ash out of the fire platform, push the restrictor in until the flame becomes active and the fire platform holes remain clean.

NOTE: If the restrictor is fully in, yet the fire platform does not remain clean, the stove needs to be cleaned and checked for air leaks (see “Maintenance” section of this manual).

Too Much Air

If the flames are too active (small, flickering flames), move the restrictor rod out until the flame slows down.

NOTE: It is acceptable to have “glowing embers” jump out of the fire platform. Another symptom of too much air is the heater “blowing the fire out” – a condition in which the pellets burn faster than they are fed (this is most common on low heat settings).

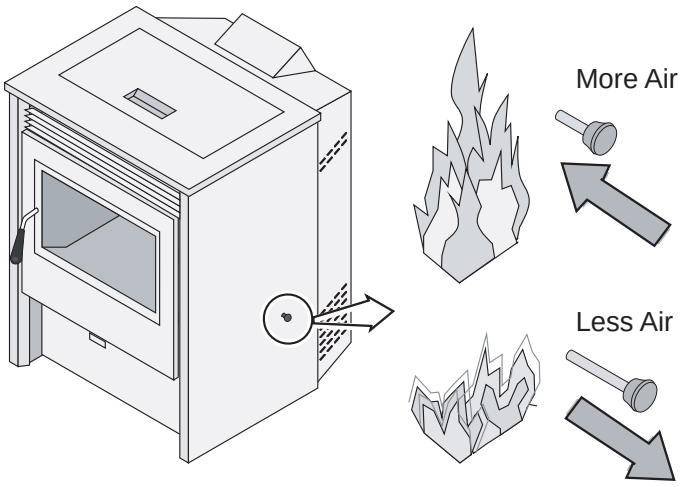

Installation Examples

Installation Example: Direct "Through-the-wall" Installation

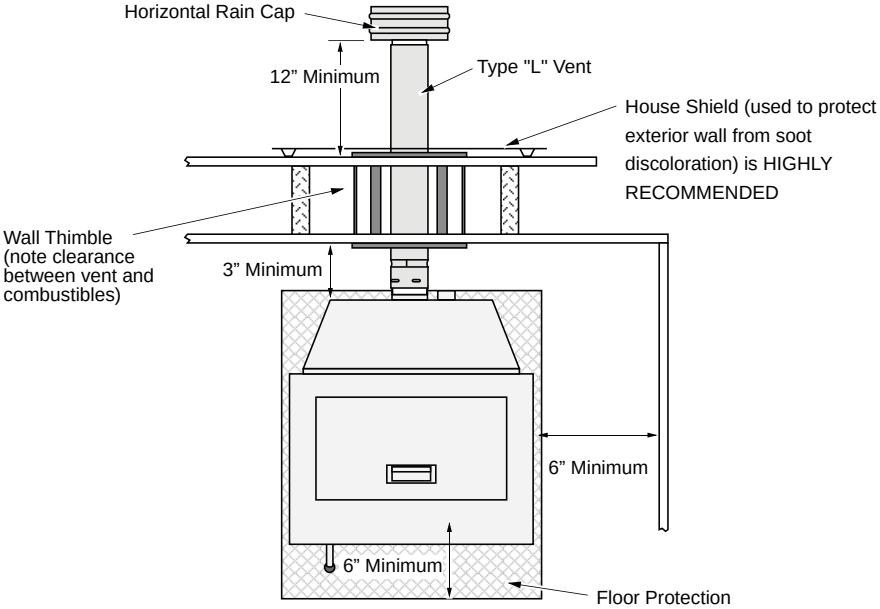

Seal each vent section (including adapters, elbows, etc...) by injecting a liberal amount of 500° F. RTV silicone into the gap between sections, unless otherwise specified by the manufacturer.

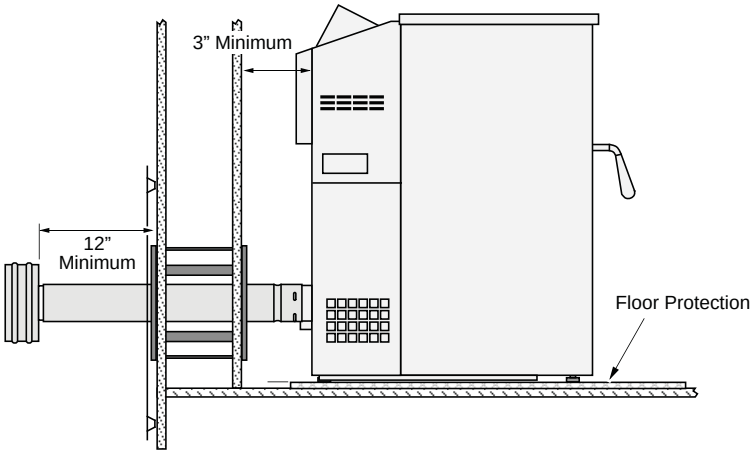

NOTE: Travis Industries recommends a minimum vertical vent of 5’ to ensure adequate draft during a power outage.

Install the vent at the clearance specified by the vent manufacturer.

Installation Example: Interior Vertical Installation

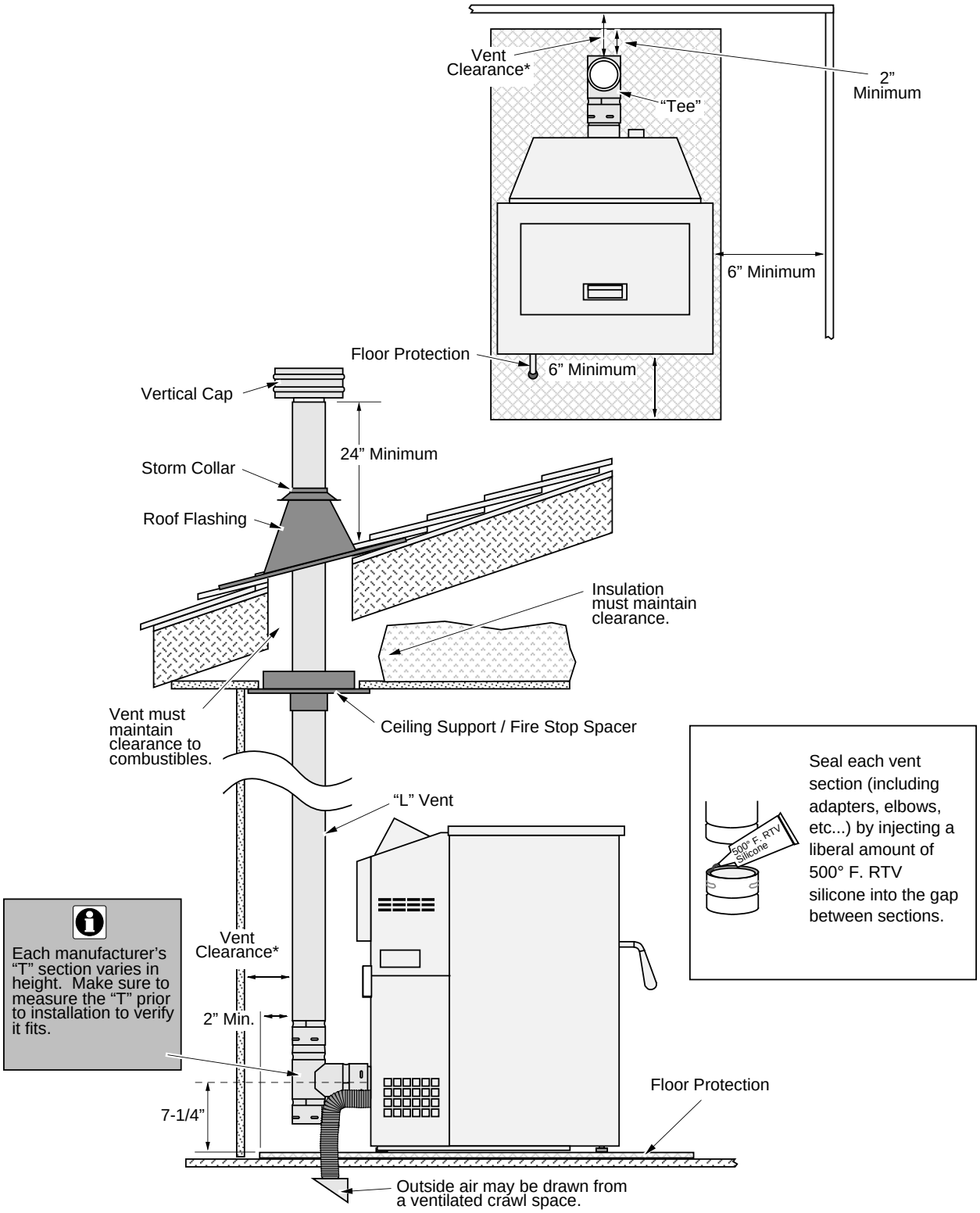

* **Install vent at clearance specified by the vent manufacturer.**

Installation Example: Class “A” Chimney Retrofit

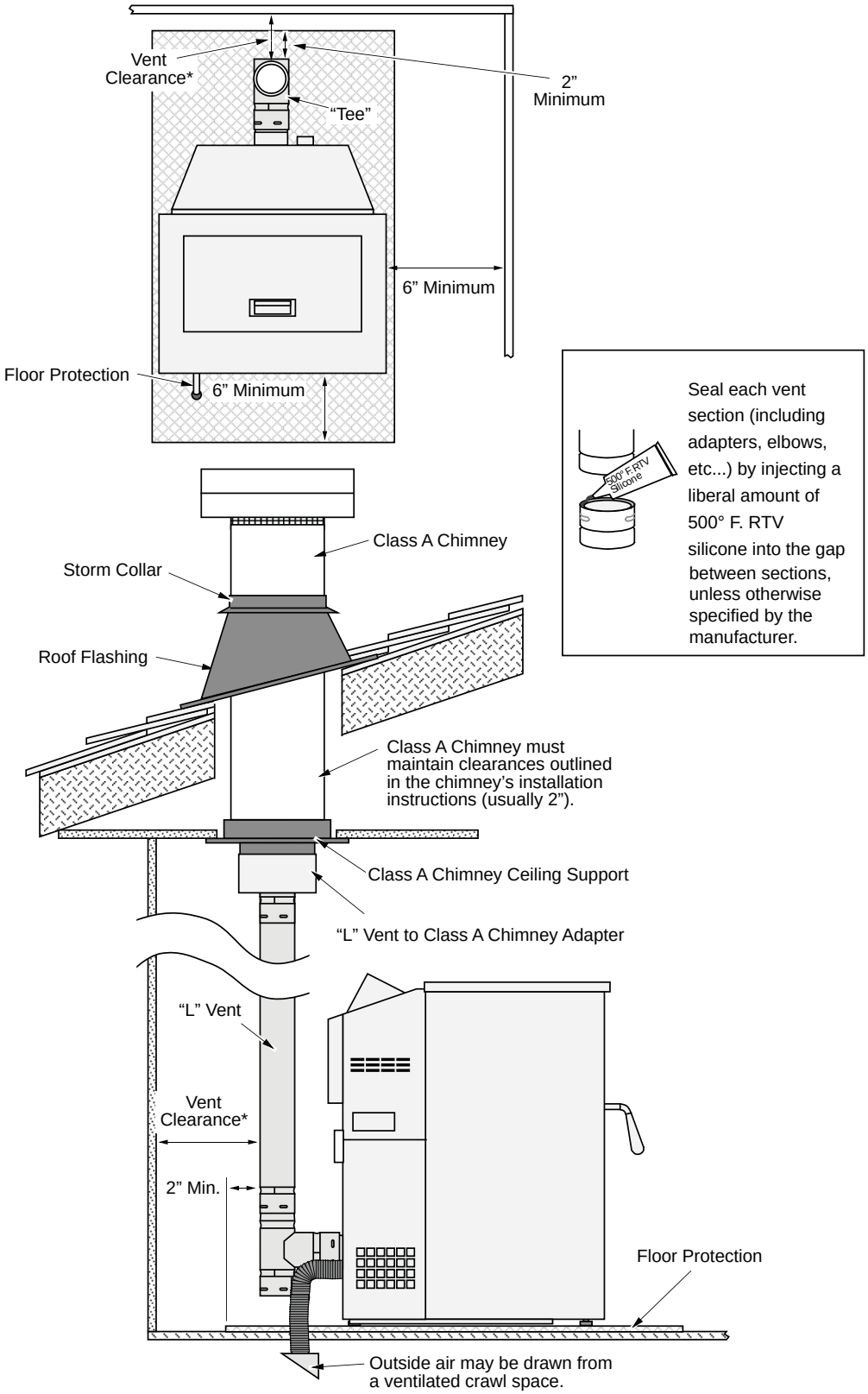

* **Install vent at clearance specified by the vent manufacturer.**

Installation Example: Masonry Fireplace Hearth Stove

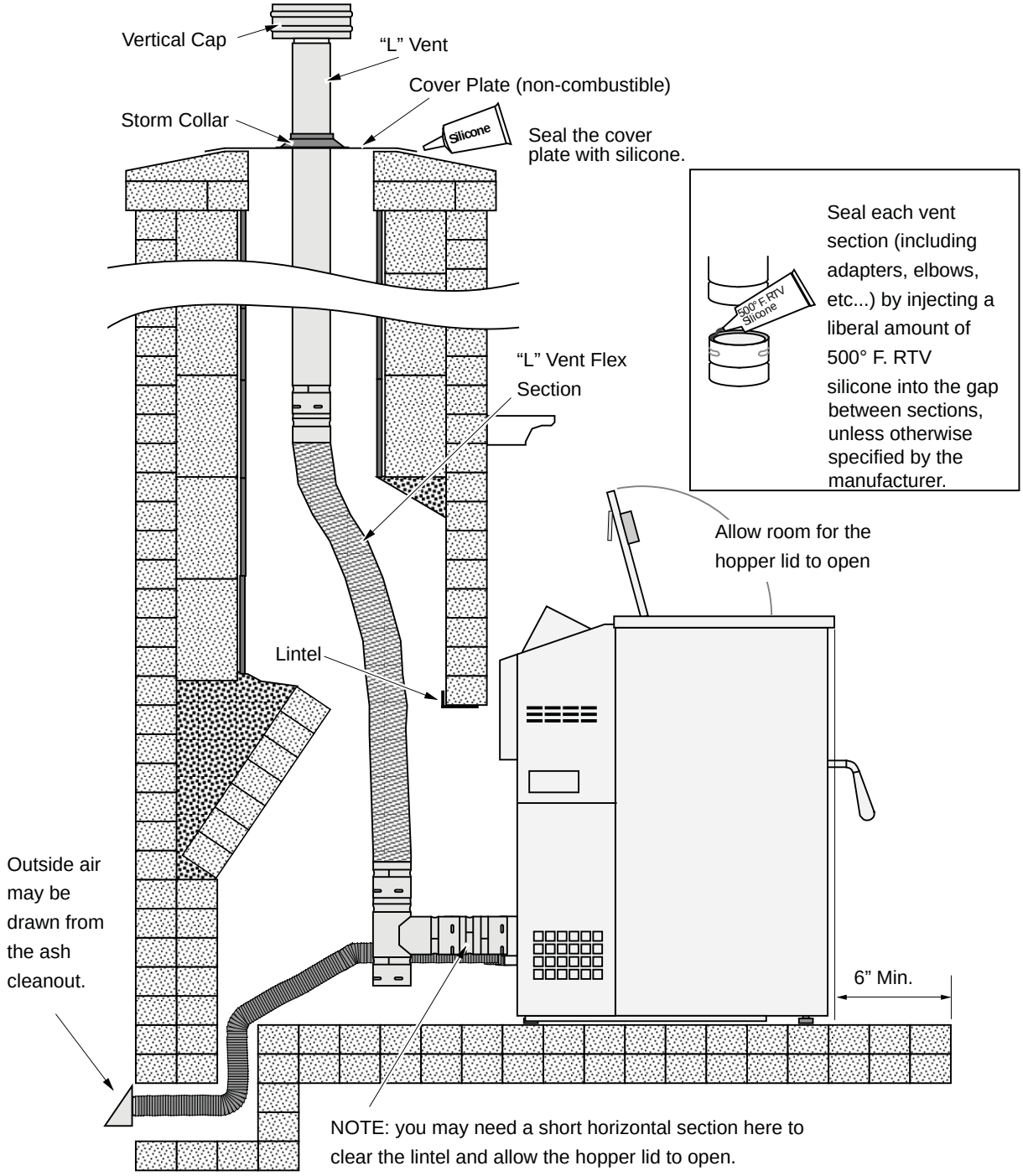

Installation Example: Zero-Clearance (Metal) Fireplace Hearth Stove

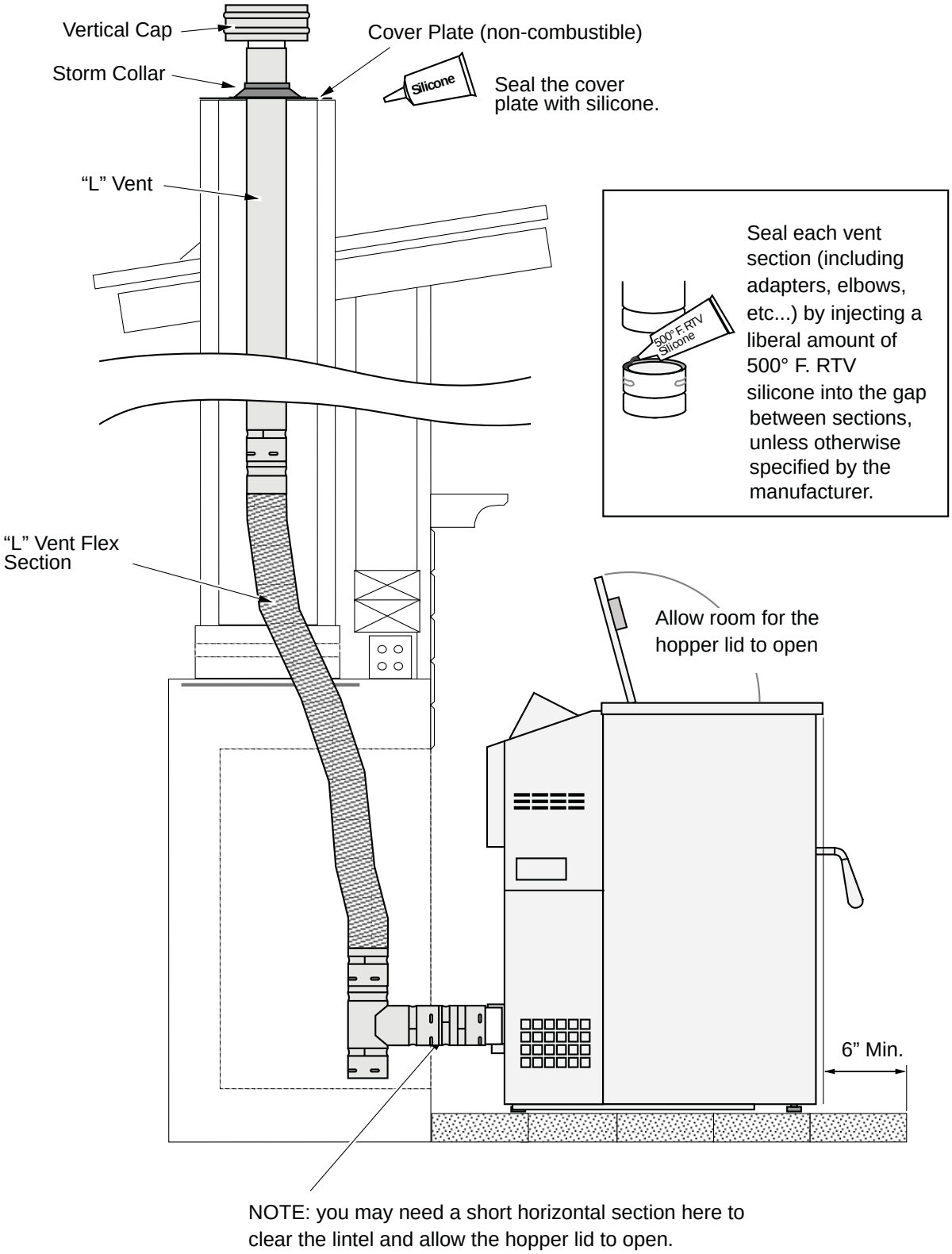

Installation Example: Freestanding Masonry Chimney

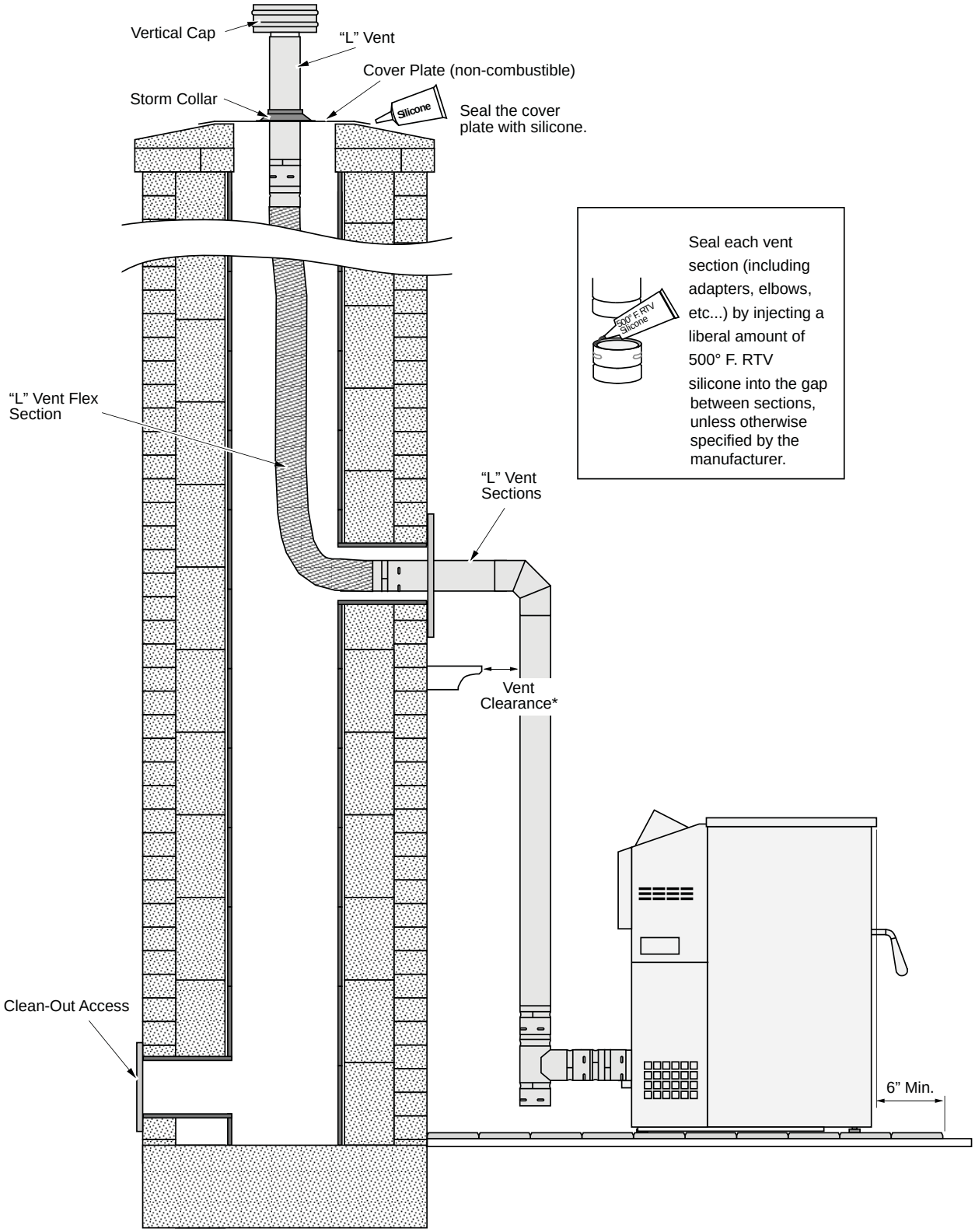

* **Install vent at clearance specified by the vent manufacturer.**

Safety Notice

READ THIS ENTIRE MANUAL (ESPECIALLY THE "SAFETY PRECAUTIONS" ON PAGES 4 AND 5) BEFORE USING THIS STOVE. FAILURE TO FOLLOW THE INSTRUCTIONS MAY RESULT IN PROPERTY DAMAGE, BODILY INJURY, OR EVEN DEATH.

DO NOT UNPLUG THE STOVE TO TURN IT OFF. THIS STOVE RELIES UPON ELECTRICITY TO PUSH THE FLUE GASES OUT THE PELLET VENT – UNPLUGGING IT MAY LEAD TO SMOKE ENTERING YOUR ROOM.

FAILURE TO MAINTAIN YOUR HEATER WILL LEAD TO A RESTRICTED COMBUSTION AIR SYSTEM, LEADING TO POOR PERFORMANCE AND IN SOME CASES, SMOKE SPILLAGE INTO THE ROOM. SEE THE "MAINTENANCE" SECTION FOR DETAILS.

DO NOT USE CHEMICALS OR FLAMMABLE FLUIDS TO START THIS HEATER.

Location of Controls

The control panel is located at the top back of the stove as shown below. Open the control panel door to access the controls.

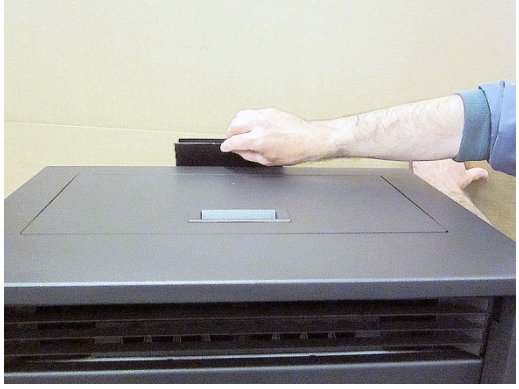

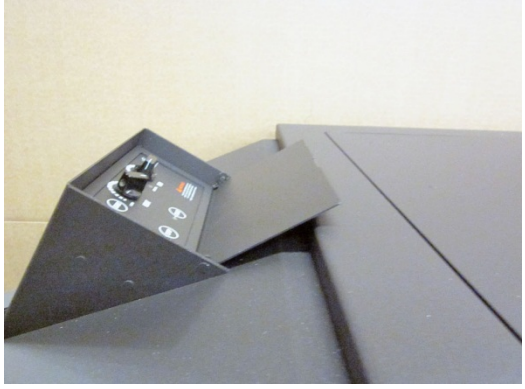

IMPORTANT: Do not let the control panel door bang open, it may scratch if it hits the stove top surface.

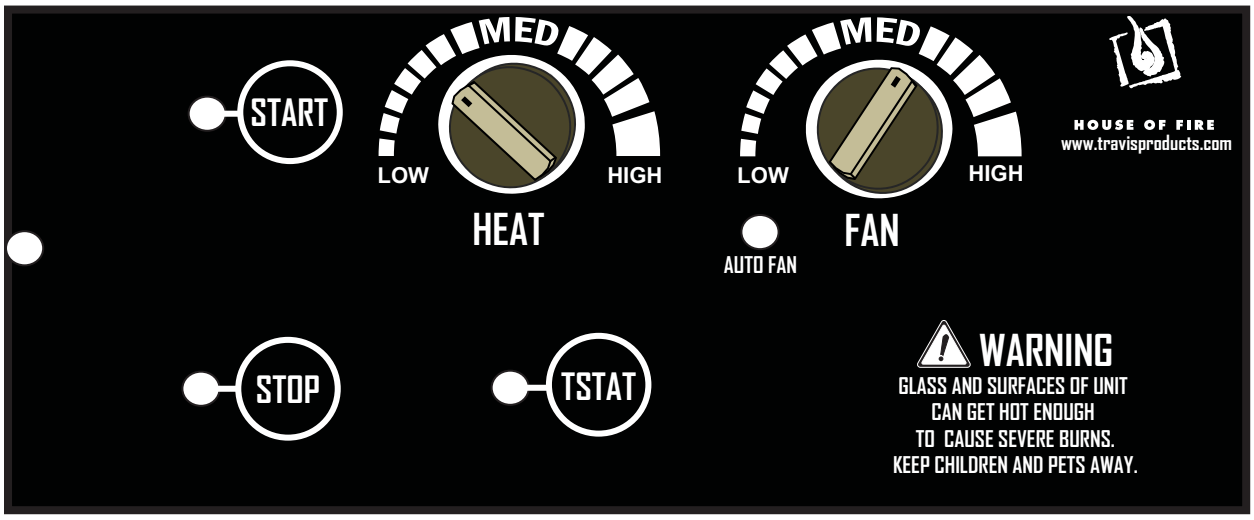

Loading Pellets

Lift the hopper lid to its vertical position. Pour pellets into the hopper.

NOTE: If the hopper lid is opened for more than 1 minute, the stove will enter shut down cycle. If this happens, simply restart the stove.

WARNING: The stove top becomes hot during operation. Make sure to keep any flammable items (bag of pellets) away from the top while reloading.

NOTE: The stove will not run if the lid is open.

Starting the Heater for the First Time

Start the Heater - Let it Burn for 1 Hour - THEN OPEN THE DOOR.

The stove paint is cured through heat. To prevent it from bonding to the door gasket, you must burn the heater for approximately 1 hour, then open and close the door to break any bonding.

Curing the Paint

This stove uses a heat-activated paint that will emit some fumes while starting the first fire. Open doors and windows to the room to vent these fumes. You may also notice oil burning off of the interior of the stove. This rust-stopping agent will soon dissipate. Allow 48 hours for the paint to cure.

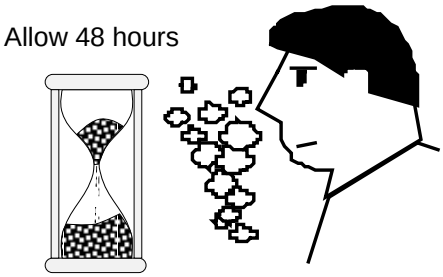

Manual Mode

Manual mode requires the user to turn the heater on and off manually and select the heat output setting.

To Start

Press the START button on the control panel. The stove will enter the start-up sequence for approximately 22 minutes.

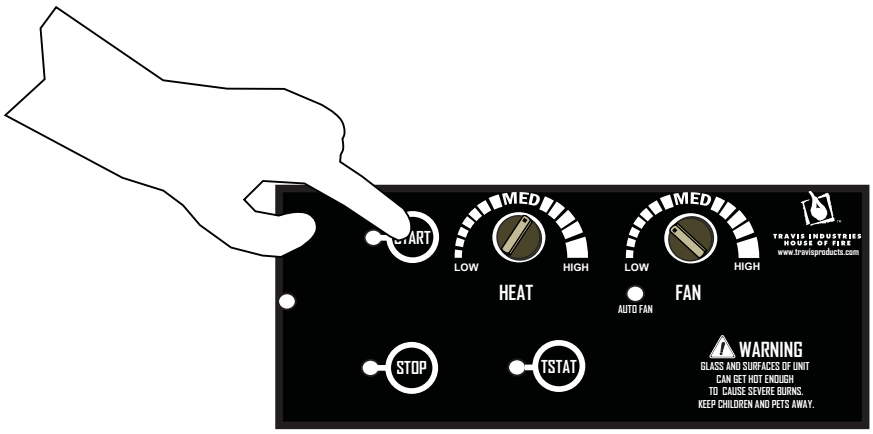

To Shut Down

Press the STOP button on the control panel. The stove will begin the shut-down process, which takes approximately 45 minutes.

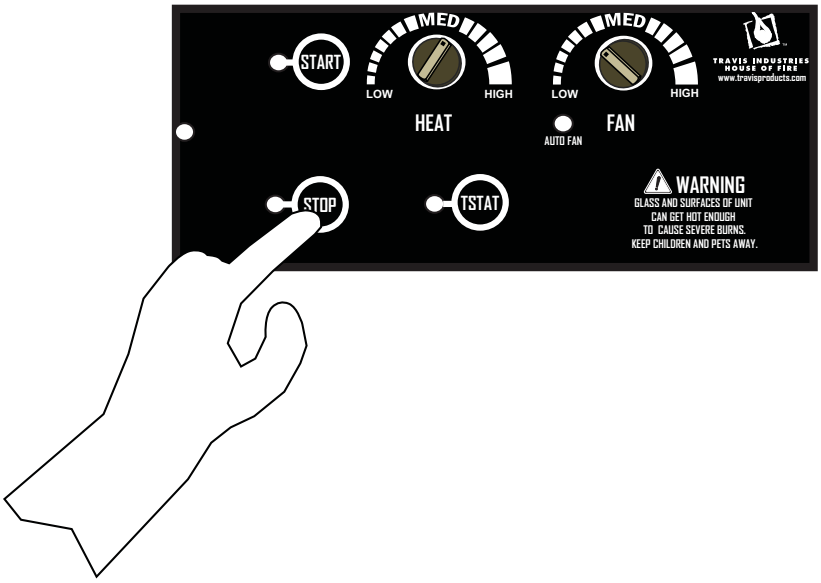

To Adjust the Heat

Turn the HEAT knob on the control panel to the left (lower heat) or right (higher heat). The HEAT knob adjusts the rate of pellets feeding into the stove.

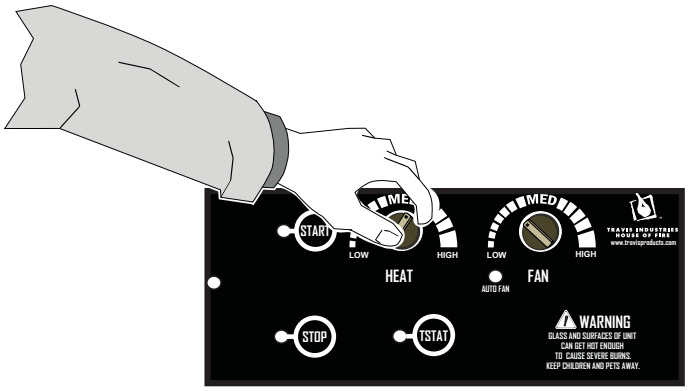

To Adjust Heat Output

Turn the FAN knob on the control panel to the left (lower fan) or right (higher fan). The FAN knob adjusts the speed of the stove's blower to move more heat out into the room.

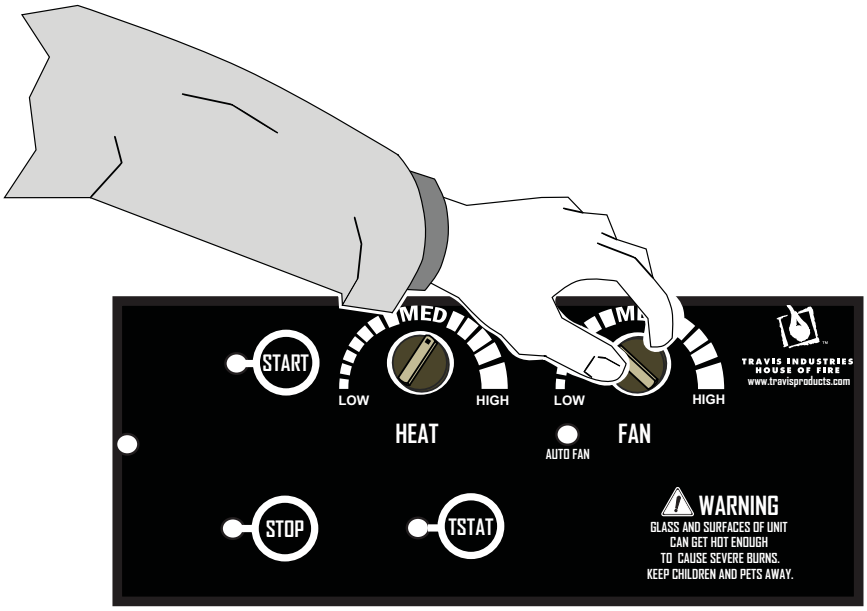

Auto-Fan

Turn the FAN knob to the AUTO-FAN setting on the control panel to automatically adjust the fan speed based on the feed rate into the hopper. This allows for more efficient operation.

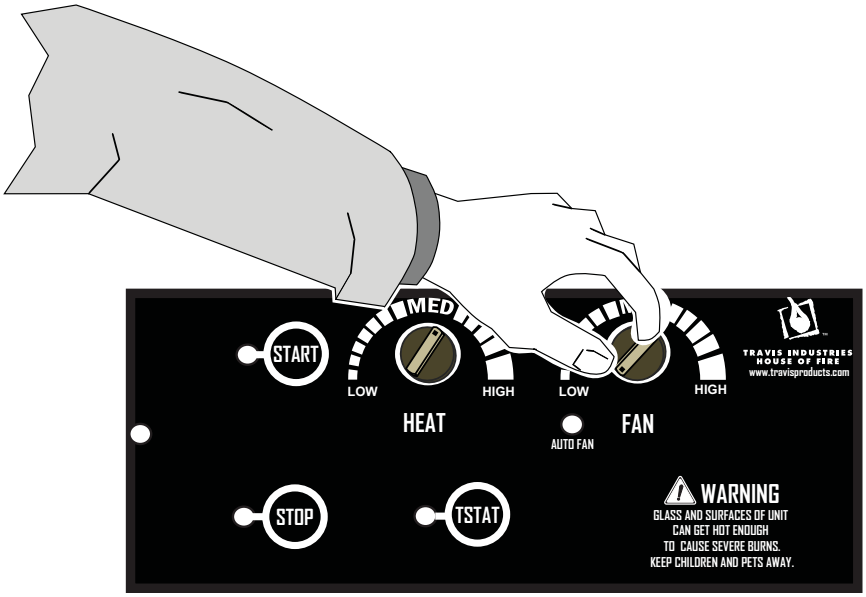

TSTAT (Thermostat) Mode

TSTAT mode allows you to use a thermostat to control room temperature. The stove automatically turns on when the temperature drops below the thermostat setting and turns off (or to low) once the thermostat setting is met.

Wireless thermostats are available from Travis Industries. See your dealer for details.

To Start the Stove in TSTAT Mode

Press the TSTAT button on the control panel. If there is a call for heat from the thermostat, the stove will enter the start-up sequence for approximately 22 minutes.

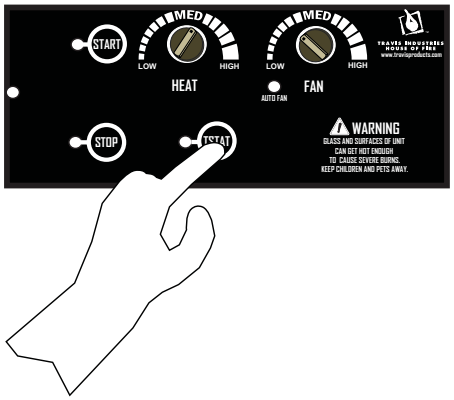

To Adjust the Heat Output

Use the HEAT knob on the control panel to adjust the heat output.

NOTE:

Depending upon which TSTAT Program you are in (1, 2, or 3), the heat output may vary once the target temperature is reached. For details see “Changing the TSTAT Program” on the following page.

TIP:

If you find that the stove turns on and off repeatedly, you may wish to turn the heat output to a lower setting, which will provide a more consistent heat output over time, and eliminate the need for the thermostat to repeatedly turn the stove off.

To Shut Down

Press the STOP or TSTAT button on the control panel **or** turn the thermostat down below the room temperature. The stove will begin the shut-down process, which takes about approximately 45 minutes.

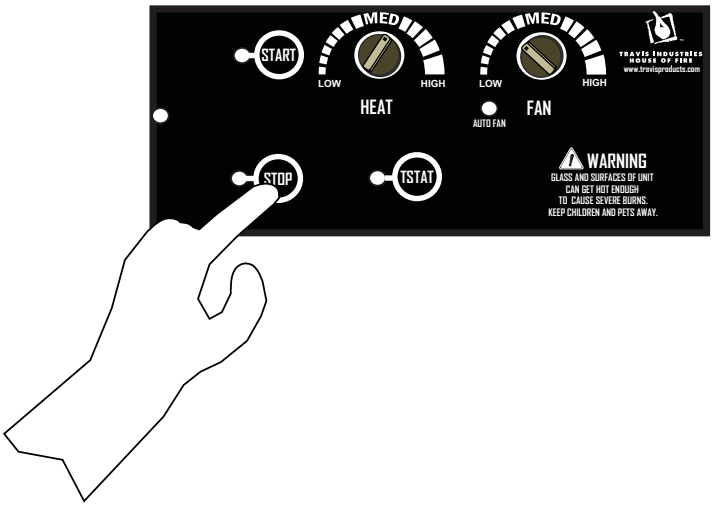

Changing the TSTAT Program

This heater comes with three TSTAT programs built in. Each program is unique and allows you to modify your thermostat setting to your preference. The stove is shipped pre-programmed in TSTAT program 1.

How to Tell Which TSTAT Program You Are In

When the heater is placed in thermostat mode (TSTAT button pressed), the BLUE light will flash once, twice, or three times. This will let the operator know which thermostat program the heater in. One blue flash indicates thermostat program 1. Two blue flashes indicates program 2. Three blue flashes indicates program 3.

Switching Between Program 1, 2, and 3

Each time you press the "STOP" and "TSTAT" button simultaneously while the unit is cold, the TSTAT program will toggle to the next program. Continue to press these two buttons until the blue Auto-Fan LED light flashes the program you wish to use.

Thermostat Program 1

When the thermostat stops calling for heat (the thermostat is open) the thermostat "steps down" to a lower heat setting. The heater will stay at this setting for 15 minutes. If the thermostat does not call for heat, the thermostat will "step down" again to a lower setting (or off). At any time if the thermostat calls for heat (thermostat is closed) during this cycle, the heater will resume at the HEAT output setting set at the control board.

Heater Set at **HIGH**	If thermostat calls for heat (thermostat closed) Heater runs at setting set on control panel dial.	If thermostat stops calling for heat (thermostat open) Heater goes to MEDIUM. If after 15 minutes thermostat still open, heater goes to MEDIUM-LOW. If after 15 minutes thermostat still open, heater goes to LOW. If after 15 minutes thermostat still open, heater turns off.
Heater Set at **MEDIUM**	If thermostat calls for heat (thermostat closed) Heater runs at setting set on control panel dial.	If thermostat stops calling for heat (thermostat open) Heater goes to MEDIUM-LOW. If after 15 minutes thermostat still open, heater goes to LOW. If after 15 minutes thermostat still open, heater turns off.
Heater Set at **MEDIUM-LOW**	If thermostat calls for heat (thermostat closed) Heater runs at setting set on control panel dial.	If thermostat stops calling for heat (thermostat open) Heater goes to LOW. If after 15 minutes thermostat still open, heater turns off.
Heater Set at **LOW**	If thermostat calls for heat (thermostat closed) Heater runs at setting set on control panel dial.	If thermostat stops calling for heat (thermostat open) Heater will run for 15 minutes. If thermostat still open, heater turns off.

NOTE: This program is not recommended for areas with little heating requirements (mild climates, small rooms, etc.).

Thermostat Program 2

In Thermostat Mode Program 2 when the thermostat stops calling for heat (the thermostat is open) the following happens:

- The burn rate decreases to Level 1 (low) for 15 minutes. If there is no call for heat during that time…
- The unit turns off.

If there is a call for heat by the thermostat (the thermostat is closed) at any point during this cool-down period then the burn rate resumes corresponding with the setting on the control panel.

Thermostat Program 3

In Thermostat Mode Program 3 when the thermostat stops calling for heat (the thermostat is open) the following happens:

- The burn rate decreases to Level 1 (low) and remains at this level until there is a call for heat by the thermostat (the thermostat is closed), then resumes corresponding with the setting on the control panel.

Start-Up Sequence (Igniter)

The stove enters a start-up sequence whenever there is a call for heat and the unit isn't in Run mode. This is ensures proper operation through all possible settings and operational states (hot or cold, pellets burning or not burning, etc.), and overrides all user settings (except the OFF position). During this period the START light will flash. The stove will not enter start-up if you are loading pellets into the hopper.

During the start-up sequence, the pellets will load into the fire platform, the flame will ignite, and the room air blower will come on when the heater comes up to the selected temperature.

NOTE: If the heater doesn't light 2 times in a row, both the START and STOP lights will turn on. The combustion blower will run for about an hour before shutting off. Check to make sure there are pellets in the hopper. We recommend cleaning the burn pot and making sure all air ports are clear of debris. Reset the unit by unplugging it and then plugging it back in.

Power Outages

Because this stove relies upon a blower to evacuate smoke, some smoke may enter the home during a power outage. Leave the door closed to keep the possibility of smoke spillage to a minimum.

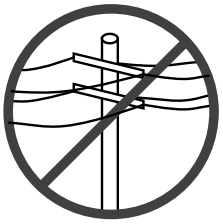

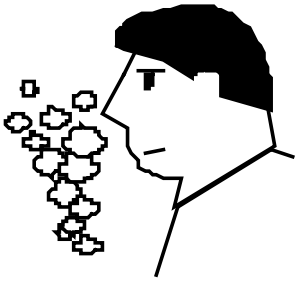

NOTE: Travis Industries recommends a minimum vertical vent of 5' to ensure adequate draft during a power outage.

NOTE: The exhaust blower will start and run up to 20 minutes every time power is interrupted (or the power cord is unplugged and plugged in). The red light on the control panel will also turn on. This safety feature evacuates smoke from the heater after a power interruption.

Manual Mode

If a power outage occurs when the unit is hot, it will enter the start-up sequence. If the unit has cooled it will enter a cool-down phase (exhaust blower will run up to 20 minutes to ensure smoke evacuation).

TSTAT Mode

If a power outage occurs while in TSTAT mode, the unit will continue to operate. If the thermostat calls for heat, the unit will enter the start-up sequence and restart. If the thermostat does not call for heat it will enter a cool-down phase (exhaust blower will run up to 20 minutes to ensure smoke evacuation).

Stove Maintenance

The following section details extensive maintenance procedures. We strongly suggest these items be carried out by a trained service technician, possibly by a service agreement set up with your dealer.

NOTE: Pellet quality can vary by state and the maintenance schedule may need to be revised to maintain the heater's effectiveness.

DISCONNECT THE POWER CORD AND MAKE SURE THE HEATER HAS FULLY COOLED (APPROXIMATELY 45 MINUTES) PRIOR TO CONDUCTING SERVICE.

Maintenance Schedule

Weekly Maintenance (or every 5 bags of fuel):

- Inspect Burn
- Clean the fire platform
- Clean the heat exchange tubes

Monthly Maintenance (or every 20 bags of fuel):

- Empty the ashpan
- Clean vertical exhaust ducts
- Clean the glass

Yearly Maintenance (or every ton of fuel):

- Clean firebox liners
- Clean lower exhaust duct
- Clean convection blower
- Clean negative pressure tube
- Clean the vent
- Clean under fire platform
- Adjust door hinge and latch
- Check for air leaks

Removing Flyash

This heater was designed to allow for easy flyash removal with the included tools. However, to ease maintenance, several pellet stove owners have purchased vacuums specifically made to remove flyash. Furthermore, some of these vacuums are heat-resistant to allow for flyash removal while it is still warm. **DO NOT USE A STANDARD VACUUM ON THIS APPLIANCE** (except to clean the pellet dust out of the hopper). Standard vacuums may spread the fine particles inside the flyash into the home and are not heat-resistant (hot flyash may cause the internal portion of vacuums to ignite).

NOTE: Ask your authorized Travis dealer for a recommended ash vacuum.

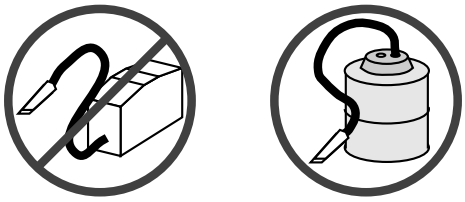

Disposal of Ashes

Ashes should be placed in a metal container with a tight-fitting lid. The closed container of ashes should be placed on a noncombustible floor or on the ground, well away from all combustible materials, pending final disposal. If the ashes are disposed of by burial in soil or otherwise locally dispersed, they should be retained in the closed container until all cinders have been thoroughly cooled.

Stove Maintenance Tools

Included with the stove are three tools for maintenance: a bottle brush, brush and the cleaning tool.

Stove Tool Storage

The stove tools may be stored on the hooks on the back of the stove. To use the hooks for the first time, bend the hooks with a screwdriver or needle-nose pliers, then hang the tools on the hooks as shown below.

Opening the Door

MAKE SURE THE HEATER HAS FULLY COOLED (APPROXIMATELY 45 MINUTES) BEFORE OPENING THE DOOR AND CONDUCTING SERVICE.

Turn the handle clockwise and pull to open the door, as shown below.

Weekly Maintenance (or Every 5 Bags of Pellets) - Inspect the Burn

Once a week you should inspect the flame quality inside your appliance. When burning on high, the flames should be bright orange. If the flames seem to be coming only from the sides, or are orange/black, turn the heater off and check for clinkers (ashes that solidify into a clump). The most likely causes of clinkers are:

- Restrictor needs adjustment (see “Restrictor Adjustment” in the Installation section of this manual) **NOTE**: The optimum restrictor position will vary over time as soot builds up inside the exhaust system. See "Restrictor Adjustment" for details.
- Poor pellet quality
- The door or glass has an air leak
- The exhaust system requires cleaning

Weekly Maintenance (or Every 5 Bags of Pellets) - Clean the Fire Platform

Once a week you should clean and inspect the fire platform. The following steps outline this process.

1. Open the door.
2. Remove the visual deflector. Note how the deflector has two hooks on each side that fit over pins to the side of the burn platform.

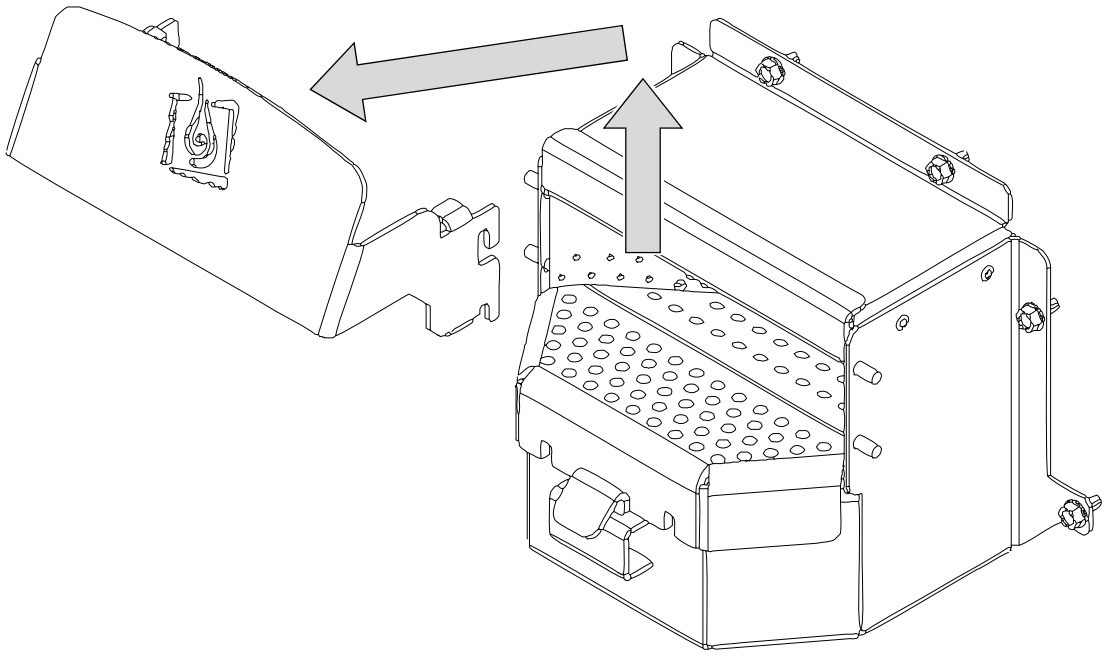

NOTES ON REPLACING THE VISUAL DEFLECTOR

When in place, make sure the visual deflector is pressed down fully on both sides. If it is not fully seated, airflow to the burn platform may be displaced and the appliance may burn poorly.

3. Use the cleaning tool to scrape away hardened clinkers or buildup on the fire platform. Use the narrow tip to clear any plugged holes. The fire platform must be free from buildup for the pellets to burn completely.

4. Brush away flyash around the fire platform using the brush included with the insert. The flyash will fall into the ashpan below.

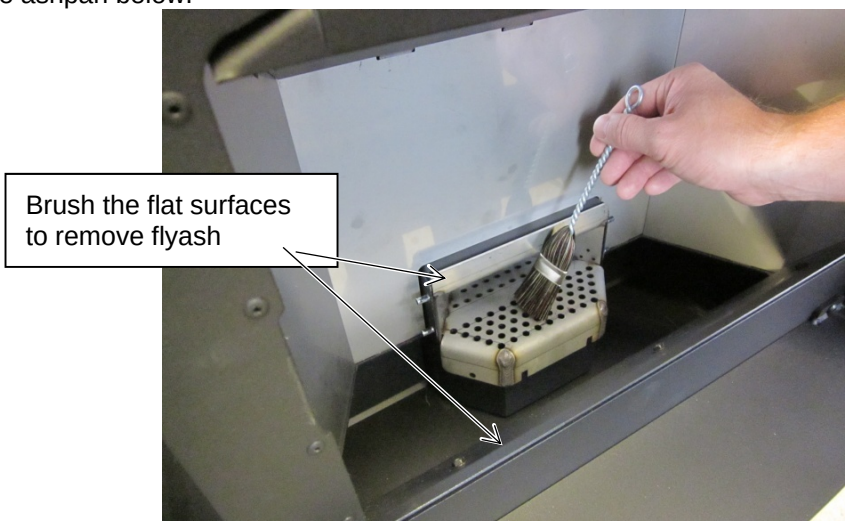

5 Remove the wedge that locks the burn platform in place. If the wedge is difficult to dislodge, use the cleaning tool to rock the wedge left to right.
NOTE: An extra wedge is included with the heater in case the original is mis-placed.

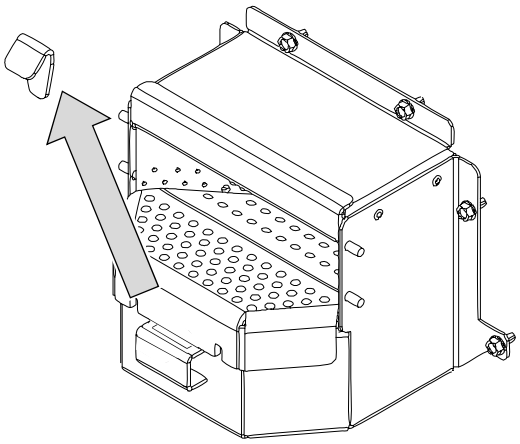

6 Remove the burn platform from the platform holder.

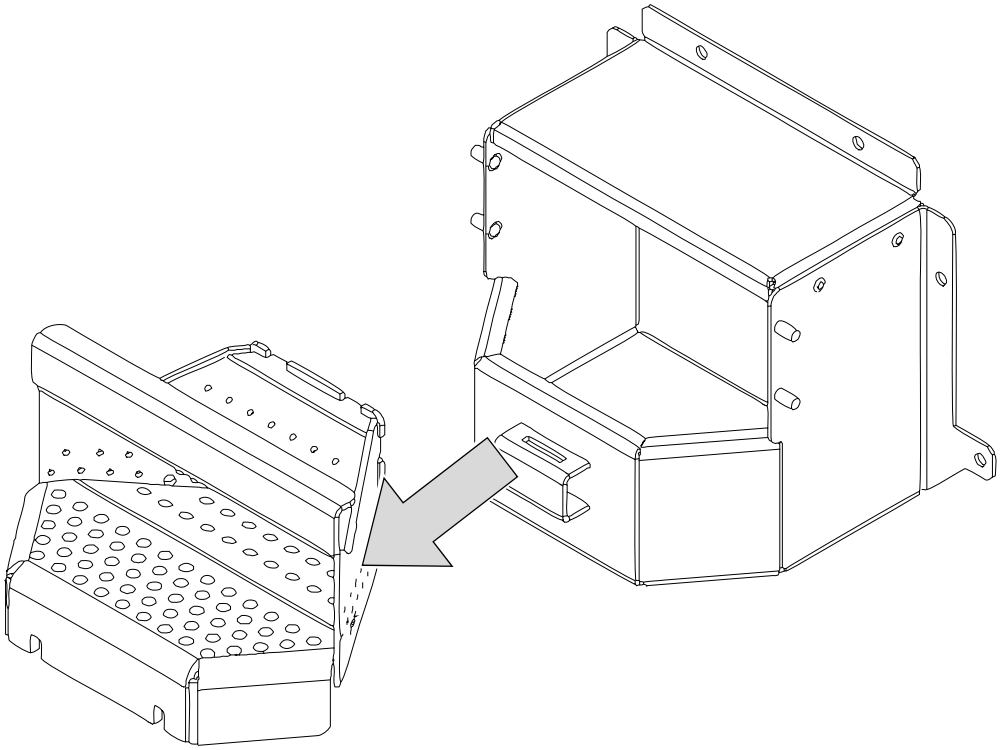

7 Clean the inside of the burnpot holder.

Weekly Maintenance (or Every 5 Bags of Pellets) - Clean the Heat Exchange Tubes

The heat exchange tubes may accumulate ash when the appliance is in use. To clean, follow the directions below.

1. With the door closed, pull the stove grill up and forward as shown below.

   NOTE: Use both hands on the grill. Using one hand in the middle of the grill may cause it to warp.

2. Hook the cleaning tool onto the heat exchange scraper rod as shown below.

3. Move the scraper rod back and forth a few times to clean the heat exchange tubes.

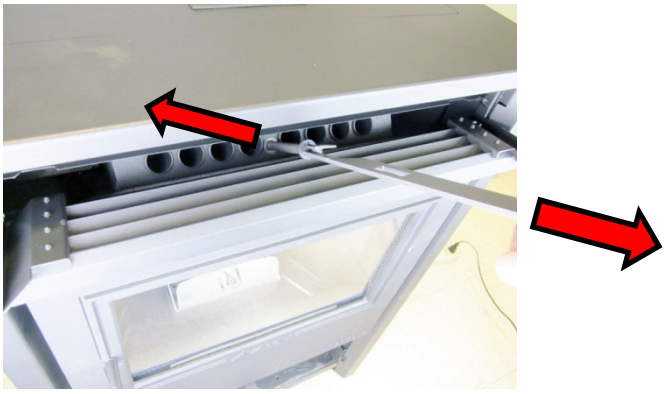

Cleaning Behind the Firebox Liners

Front View of Firebox Liners

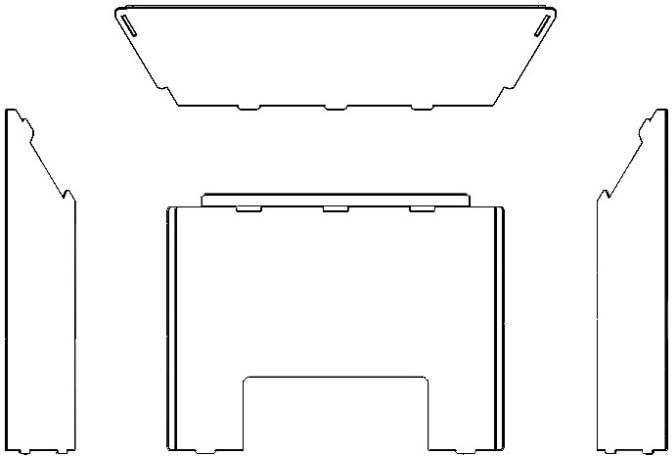

Isometric View
(note how the top liner has a flange that bends down)

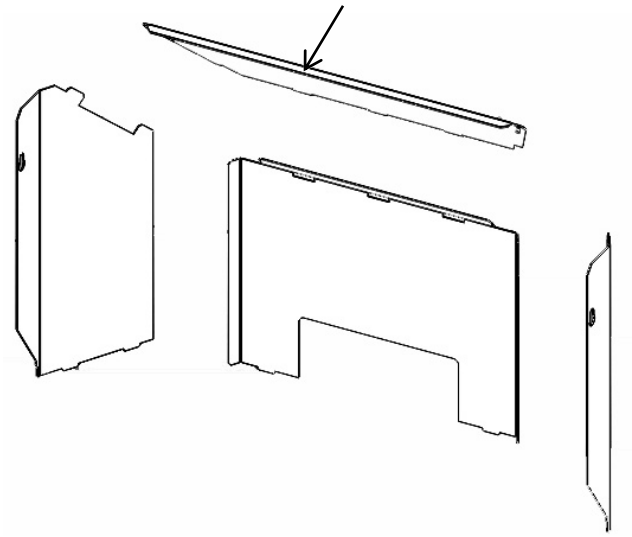

The firebox liners help trap flyash before it enters the exhaust blower. Remove the liners and clean the area behind them following the directions below.

1. Open the door.
2. Remove the top liner. It is held in place with 3 tabs at the bottom and one large tab (and slot) on the sides. To remove, lift it up and slide it out.

3. Remove the side liners. They have keyhole slots that fit over screws on the side of the firebox. Lift them up, tilt them inwards, then remove.

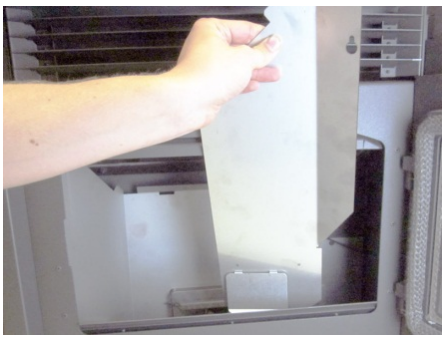

4. Remove the rear liner. Lift it up and remove it from the firebox.

5. With the liners removed, clean all flyash and debris from the firebox. Clean the liners before replacing.

Monthly Maintenance (or Every 20 Bags of Pellets) - Clean the Glass

Open the doors and clean the glass with a non-abrasive glass cleaner and rag.

Monthly Maintenance (or Every 20 Bags of Pellets) – Empty the Ashpan

MAKE SURE THE HEATER HAS FULLY COOLED (APPROXIMATELY 45 MINUTES) BEFORE CONDUCTING SERVICE.

THE ASHPAN MUST BE IN PLACE WHILE THE HEATER IS IN USE.

The ashpan will accumulate ash as you use the appliance. See the steps below to empty the ashpan.

1. Rotate the ashpan handle clockwise and pull it down to access the ashpan.

2. Slide the ashpan forward. Use the built-in rod to lift the ashpan out of the firebox.

   NOTE: Do not use the ashpan handle to pull the ashpan out; instead use the lip on the front of the ashpan.

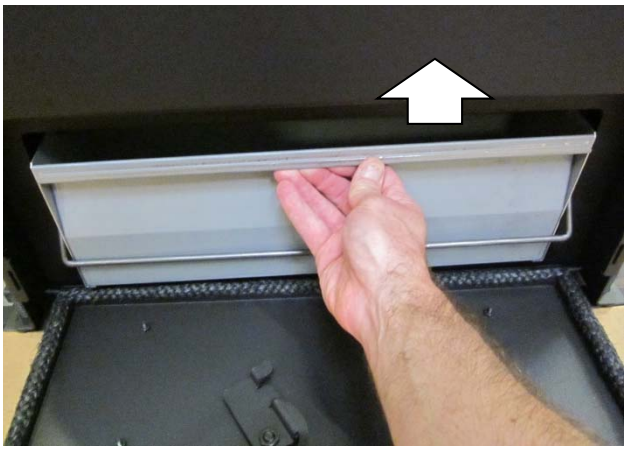

3. Remove the ashpan from the appliance and properly dispose of the ashes (see “Disposal of Ashes” on page 28 for details).

Yearly Maintenance (or Every Ton of Pellets) - Clean the Lower Exhaust Duct

1. With the ashpan removed (see page 36), remove the ashpan guide as shown below. Clean the area under the ashpan guide.

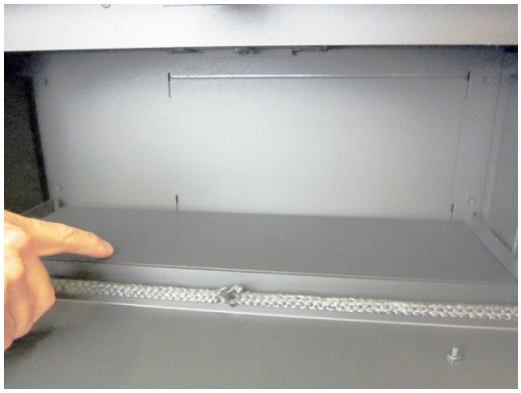

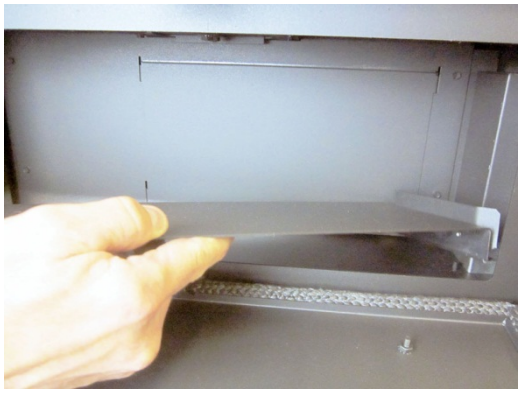

2. Remove the exhaust duct cover as shown below. Press up on it and lift it out.

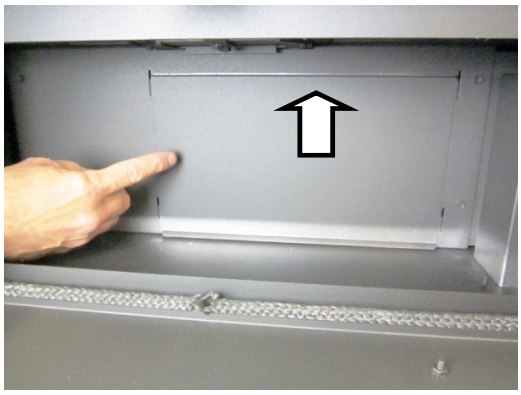

3. Remove the exhaust channel cover plate and gasket (11/32” nutdriver).

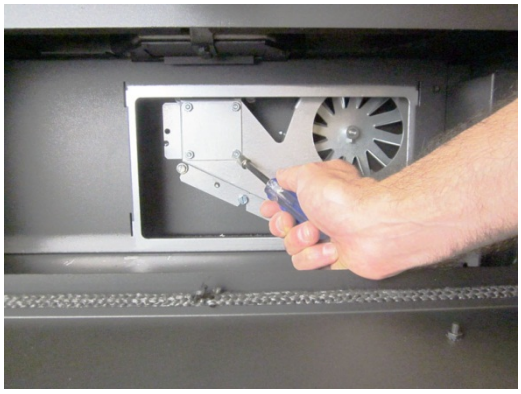

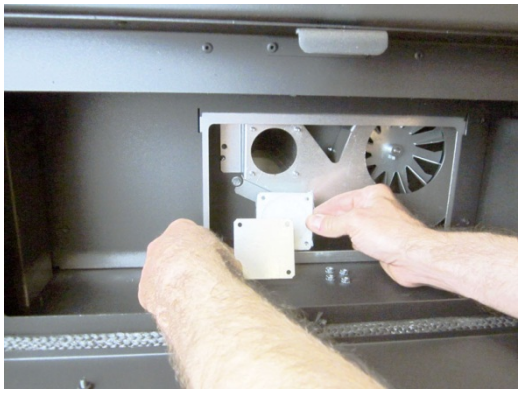

4. Clean the exhaust channel with the bottle brush or vacuum.

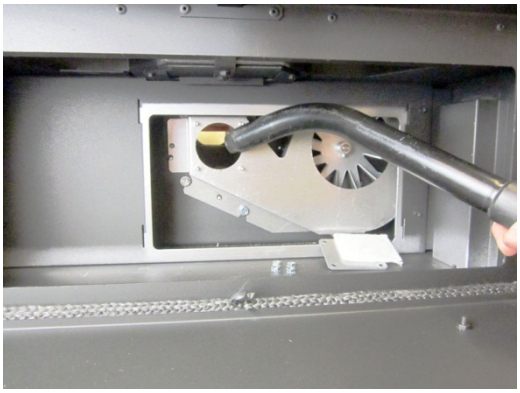

5. Clean the combustion blower with the bottle brush or vacuum.
   NOTE: Take care to prevent damaging the combustion blower impellers.

Yearly Maintenance (or Every Ton of Pellets) - Clean the Convection Blower

1. Remove the thumb screw on the left side of the stove. Swing the panel out, slide it forward to remove, and place it aside.

2. Remove the top and bottom screws securing the convection blower cover and remove the cover as shown below (5/16" nutdriver).

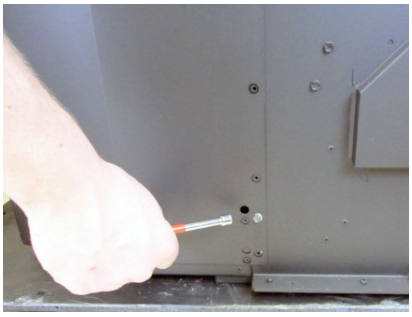

3. Remove the 2 nuts securing the blower using a 7/16" nutdriver. Lift out and remove the convection blower from the stove as shown below.

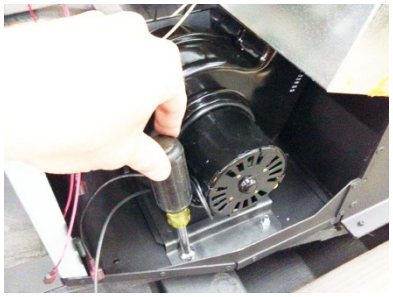

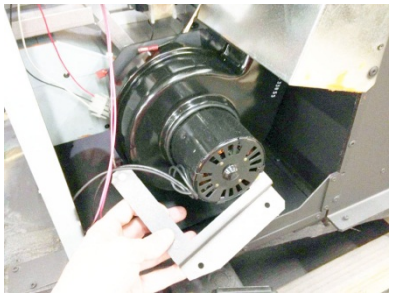

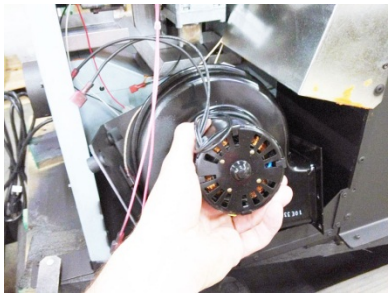

4. Remove all dust and debris from the convection blower.
   NOTE: Take care to prevent damaging the impellers.

Yearly Maintenance (or Every Ton of Pellets) - Clean the Negative Pressure Tube

1. Disconnect the end of the tube from the combustion blower.

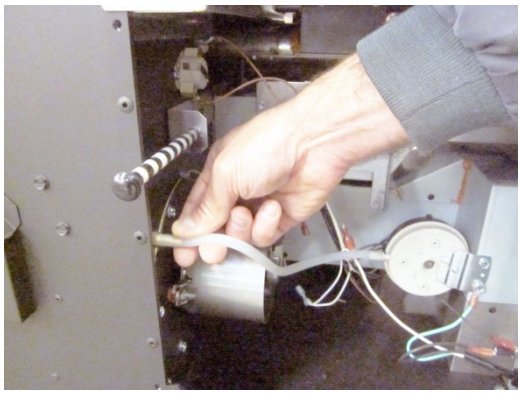

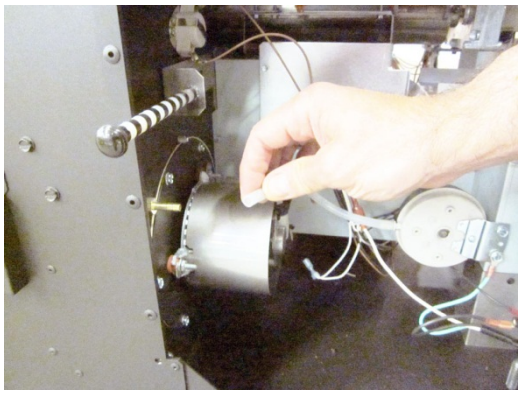

2. Clean the nozzle using a pipe cleaner.

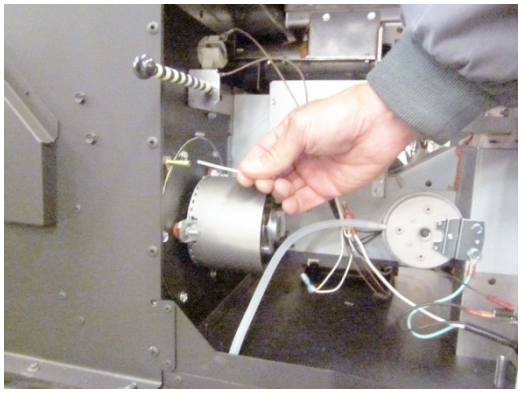

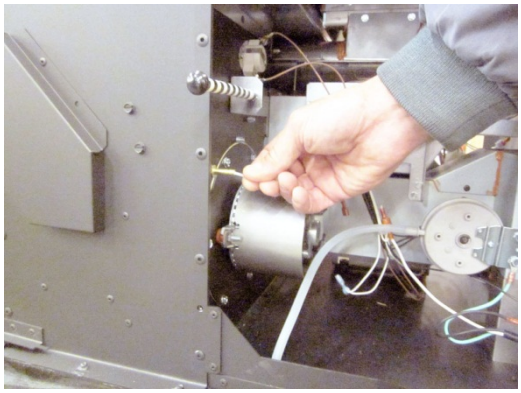

Yearly Maintenance (or Every Ton of Pellets) - Clean the Vent

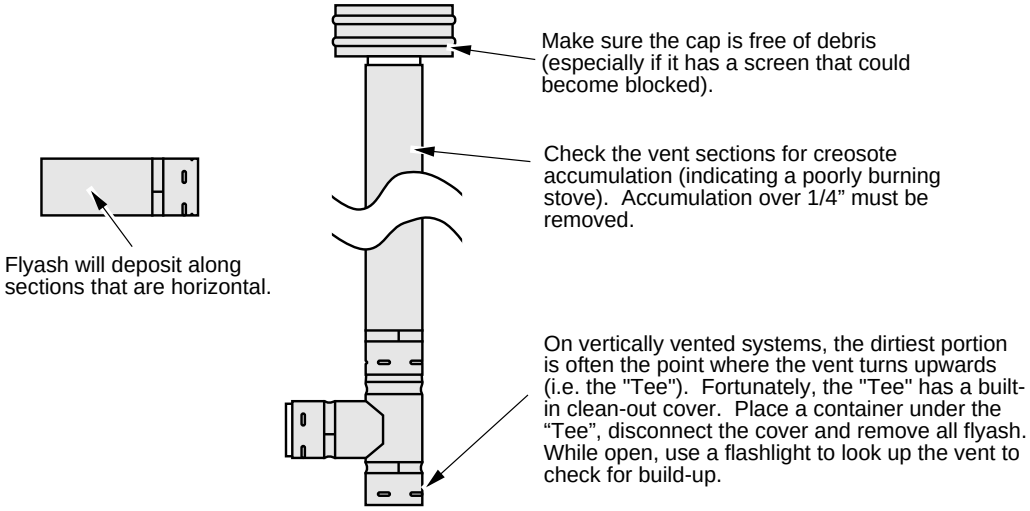

WHENEVER ANY PORTION OF THE PELLET VENT IS DISCONNECTED, THE JOINTS MUST BE SEALED WITH RTV 500° F. SILICONE SEALANT, UNLESS OTHERWISE SPECIFIED BY THE VENT MANUFACTURER.

Yearly Maintenance (or Every Ton of Pellets) - Adjust the Door Cam

The door cam should be tight enough to pull the door against the face of the stove yet not so tight as to not allow full handle rotation. To tighten the door cam, remove the door handle and remove one of the washers between the door frame and cam (the washer may be stored for future use by placing it between the cam and nut). To loosen the door cam, add a washer between the door frame and cam.

NOTE: Older models use 7 washers between the door & cam. Newer models use 1 bushing & 3 washers.

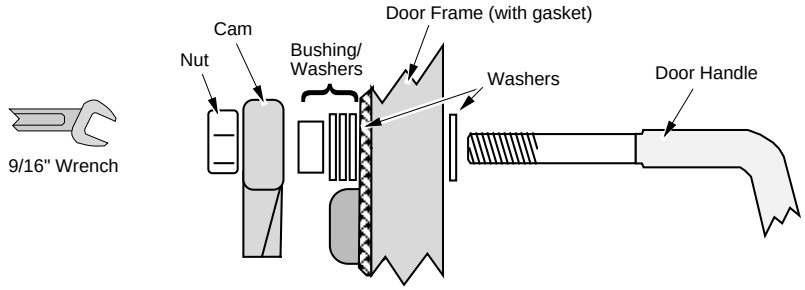

Yearly Maintenance (or Every Ton of Pellets) - Check for Air Leaks Around the Door, Glass, and Ashpan

Air leaks into the firebox will decrease the stove's performance greatly, leading to excessive sooting, inefficient burning, and perhaps a malfunction.

- Inspect the door gasket to make sure it is fully attached. If the door gasket is worn or flattened, replace.
- If the glass is cracked, replace. The glass is held in place with clips.
- Open the ashpan access door and inspect the gasket around the door. Re-attach or replace the gasket if necessary. Re-attach, or replace the gasket if necessary.

NOTE: Ask your authorized Travis dealer to demonstrate how to check a door seal.

Every Two Years (or Every 4 to 6 Tons of Pellets) Chisel Replacement

- The chisel is designed to shear pellets during operation. As the chisel becomes dull over time it will make it harder for the appliance to shear pellets and could shorten the life of the feed motor. We recommend that the chisel be replaced every two years or 4 to 6 tons of pellets to help ensure proper operation of the appliance.
- To remove the chisel, first remove all pellets from the hopper. Turn the appliance on and turn the heat rate to "HIGH". The hopper lid switch will need to be held in the closed position (AGP appliances) or the hopper lid will need to be closed and you can look through the glass lid (Deerfield & Foxfire stoves) for the feed system to turn. The chisel will rotate into view (it is the serrated component held in place with two screws). Once the chisel is in the proper position, unplug the heater and remove the cover plate at the bottom of the hopper (6 screws hold it in place). The chisel is held in place with two cap head screws (use a 1/8" hex wrench to remove). Remove the chisel and replace with a new chisel (available from your dealer). **NOTE: There is a shim (2 shims on older units) under the chisel – make sure to replace the shim when installing the chisel**. When replacing the cover plate, make sure to place the gasket between the cover plate and hopper (use silicone if gasket is not used). This prevents pellet dust from falling below. Return the heater to the correct configuration before operating.

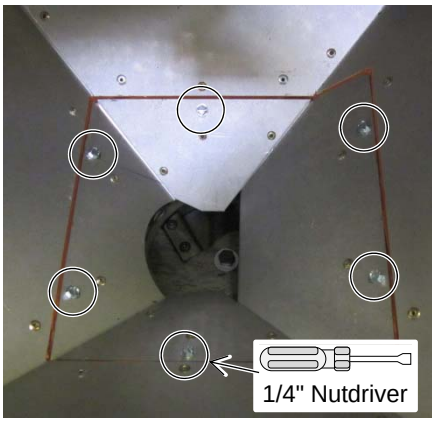

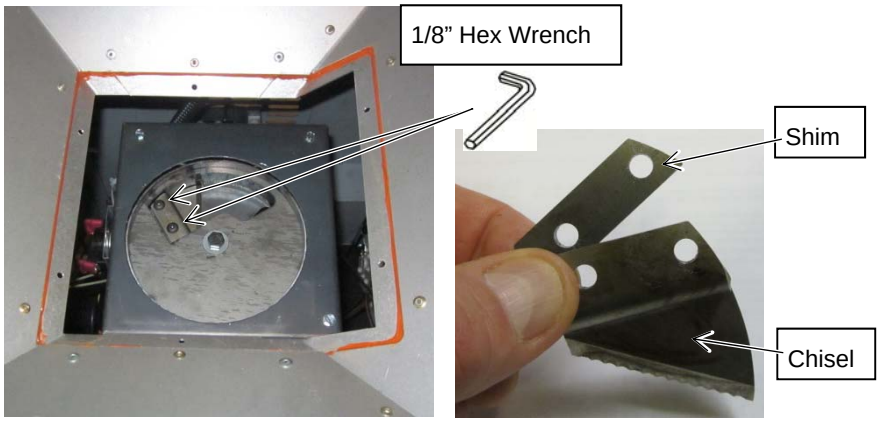

Troubleshooting Table

Lights on the control panel will flash when a fault has occurred. Follow the steps below to diagnose.

Diagnostic Code:	Possible Cause:	Don't Call for Service Until You:
RED LIGHT FLASHING	Inadequate draft, plugged pressure switch, or push auger error.	• Press the STOP button to clear the error code. • Press the START button to re-ignite the appliance.
RED & GREEN LIGHTS FLASH SIMULTANEOUSLY	Ignition startup has failed. NOTE: The 2nd time this happens consecutively, the lights will be solid and appliance will lock out for 1 hour.	• Press the STOP button to clear the error code. • Verify the appliance has pellets, clean the burn platform, then restart the appliance.
BLUE LIGHT FLASHING	Appliance is over-temperature and has entered safety shutdown mode. The appliance will no longer feed pellets and both blowers will remain on until the appliance has cooled sufficiently.	• Press the STOP button to clear the error code. • Verify the appliance is clean (free of ash and debris) and the room blower operates (clean if necessary). • Clean the burn platform then restart the appliance.
RED & GREEN LIGHTS FLASH ALTERNATELY	Appliance ran out of fuel or hopper lid not fully closed. In rare cases, the metering motor or system disc may have malfunctioned.	• Press the STOP button to clear the error code. • Verify the appliance has pellets, the hopper is fully closed, clean the burn platform, then restart the appliance.

Replacement Parts

Contract your Travis Industries Dealer for replacement parts. Use only replacement parts from Travis Industries designed specifically for this heater.

Door Parts

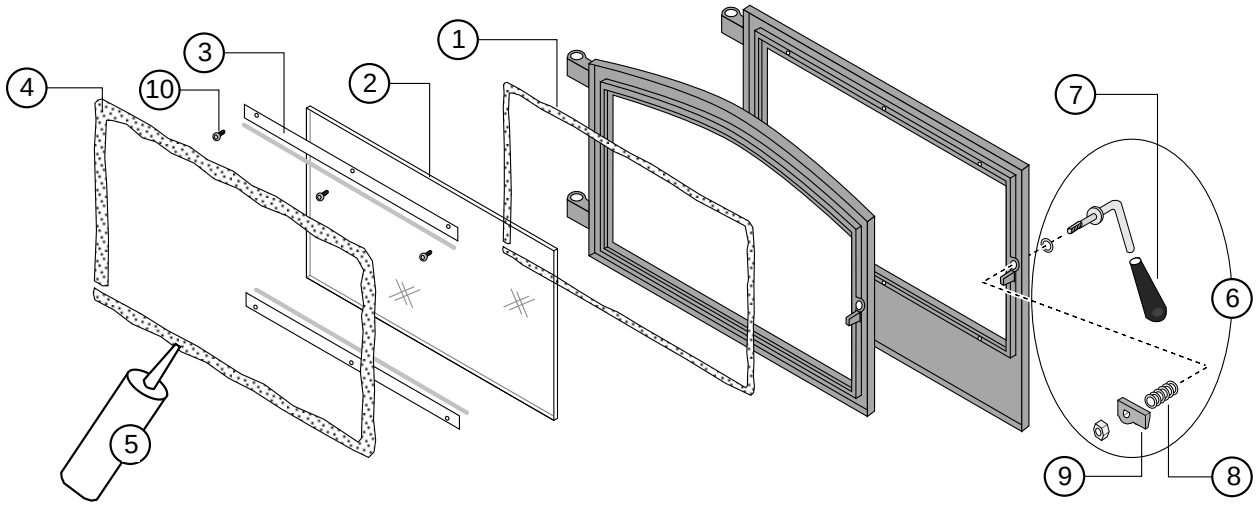

ID #	Description	Qty	Part #		ID #	Description	Qty	Part #
1	Glass Gasket (3/8” Diameter)	1	250-02801		2	Glass – Rectangular Glass - Arched	1 1	250-02073 250-02678
3	Glass Clips w Gasket	1	250-00174		4	Door Gasket (7/8” Diameter)	1	250-00178
5	RTV High Temp. 600° Silicone				6	Door Handle Assembly	1	250-02074
7	Door Knob	1	250-02964		8	Door Washer	1	250-00364
9	Door Cam	1	250-00598		10	Screws (8) 8-32 x 1/2” Torx	1	250-01478

Wiring Diagram

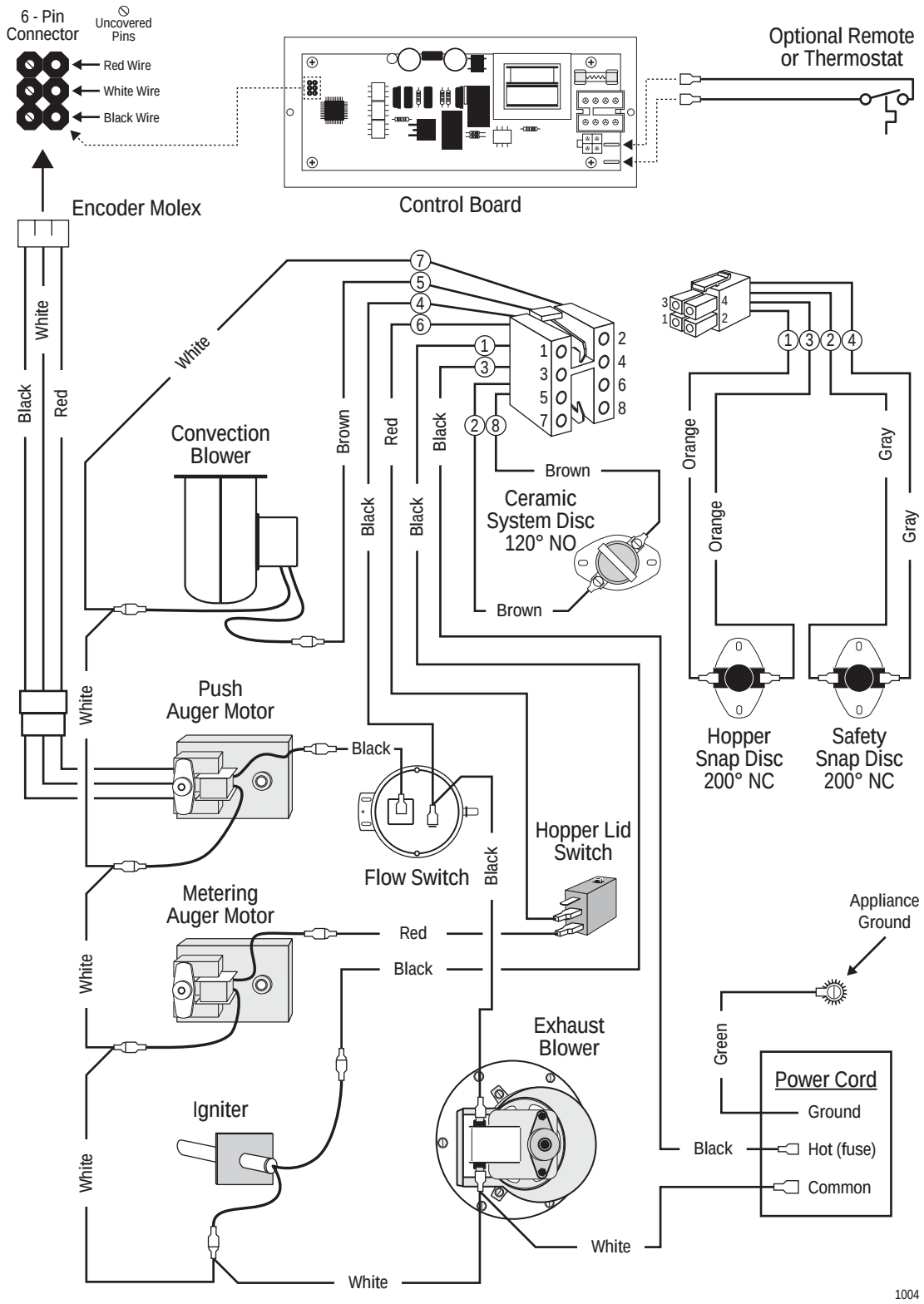

Thermostat Installation (Optional)

DO NOT CONNECT 120 VAC OR 24V TO THE THERMOSTAT CIRCUIT OF THIS HEATER (DO NOT USE A HOUSEHOLD THERMOSTAT USED FOR A WALL-BOARD OR OTHER ELECTRICAL HEATER). USE A LOW VOLTAGE COMPATIBLE THERMOSTAT.

Wired (99300650) or wireless thermostats (99300689) may be attached to this appliance. Open the left side access panel and locate the wires labeled “TSTAT”. Route the thermostat wires to this location and attach them to these wires (orientation does not matter). Make sure the wires do not contact hot or moving components. See the instructions included with the thermostat for further details.

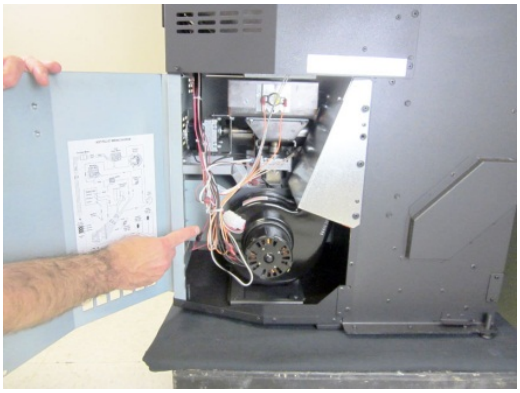

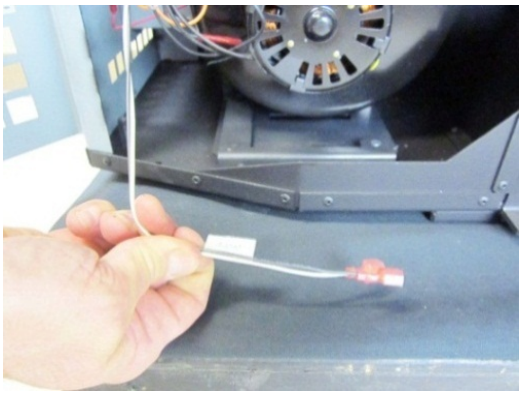

Outside Air Kit

See the instructions included with the outside air kit for full details.

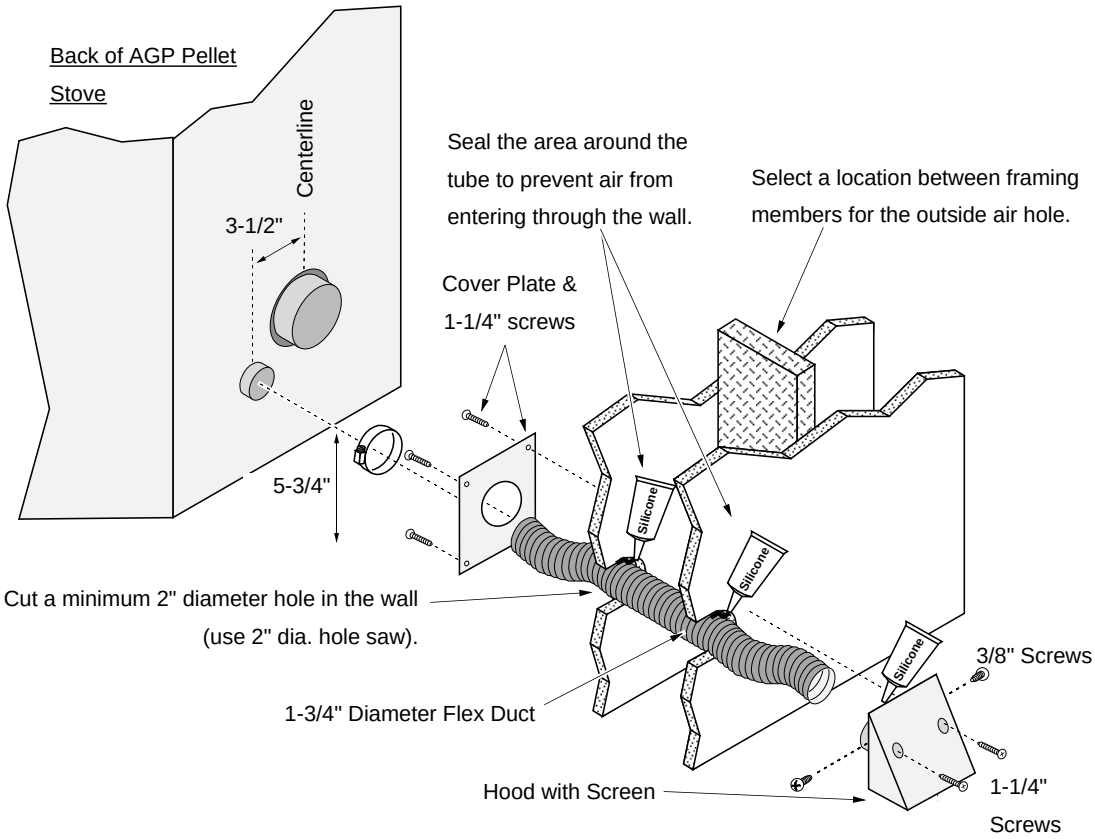

Intertek
Report No. 100517995-001
Control No. 4000515

WARNING - DO NOT REMOVE OR COVER THIS LABEL

MODEL: AGP PS

Listed Pelletized Solid Fuel Burning Appliance
Also for use in mobile homes
Certified for US and Canada

SERIAL NO:

Conforms to ASTM E1509-04, Room Heater Pellet Burning Type (UM) 84 HUD; Certified to ULC S627
Electrical Rating: 115 V, 60 Hz, 3 Amp: Start 3 Amps, Run 2.2 Amps with blower on High
Maximum Input Rating: 5.0 lbs/hr

This pellet fired appliance has been tested and listed for use in manufactured (mobile) homes in accordance with OAR 814-23-900 through 814-23-909.

WARNING - FOR MANUFACTURED HOMES: Must utilize outside combustion air inlet (part #99200136) or equivalent. Structural integrity of the manufactured home floor, ceiling and walls must be maintained.

Install only in accordance with the manufacturer's installation and operating instructions. Contact local building or fire officials about restrictions and installation inspection in your area. Use only 3 in. / 77 mm diameter listed type "L" or "PL" venting system. See manufacturer's installation instructions and local codes for precautions required for passing chimney through a combustible wall or ceiling. Do not connect this appliance to a chimney flue serving another appliance. Inspect and clean exhaust venting system frequently in accordance with manufacturer's instructions.

May be installed in a sleeping room with use of outside combustion air inlet (Part #99200136) or equivalent.

For use with 1/4 in. / 6 mm to 5/16 in. / 7 mm diameter pelletized wood fuels only.
Replace glass only with 5 mm ceramic glass available from your dealer.
DANGER: Risk of electrical shock. Disconnect power supply before servicing. Route power cord away from unit. Do not route power cord beneath heater.
Operate only with viewing door and ash removal tray tightly closed. Do not obstruct combustion air openings. The space beneath heater must not be obstructed. Keep all furnishings away from heater.

Minimum Clearance to Combustible Materials (Measured to Stove Top)

		Interior Vertical Flue Installation	Horizontal Through the Wall Installation
Side wall	A	6 in. / 153 mm	6 in. / 153 mm
Rear wall	B	**	3 in. / 77 mm
Corner	C	3 in. / 77 mm	3 in. / 77 mm
Flue Vent	D	2 in. / 51 mm **	2 in. / 51 mm **

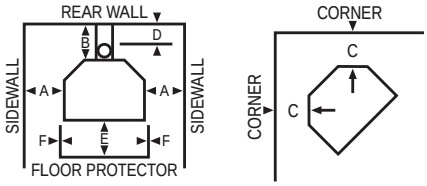

Manufactured by:

TRAVIS INDUSTRIES
HOUSE OF FIRE
12521 Harbour Reach Drive
Mukilteo, WA 98275
www.travisproducts.com

Maximum alcove depth 48 in. / 1220 mm, minimum ceiling height 60 in. / 1524 mm, minimum alcove width 36-9/16 in. / 929 mm.
Combustible floor must be protected by a non-combustible material underneath appliance, extending to the front (E) 6 in. / 150 mm and to the sides (F) 0 in. / 0 mm.
EXCEPTIONS: Non-combustible floor protection must extend beneath a vent tee when installed.
** This dimension will vary depending on brand of listed type "L" vent. See manual for details.

U.S. ENVIRONMENTAL PROTECTION AGENCY
Certified to comply with 2015 particulate emission standards. Not approved for sale after May 15, 2020. 0.67 g/h, Method 28, 5G2, 2015

DATE OF MANUFACTURE:	2015	2016	2017	Jan.	Feb.	Mar.	Apr.	May	June	July	Aug.	Sep.	Oct.	Nov.	Dec.
Made in U.S.A.	■	■	■	■	■	■	■	■	■	■	■	■	■	■	■

1000

Limited 7 Year Warranty

To register your TRAVIS INDUSTRIES, INC. 7 Year Warranty, complete the enclosed warranty card and mail it within **ten (10)** days of the appliance purchase date to: TRAVIS INDUSTRIES, INC., 12521 Harbour Reach Drive, Mukilteo, WA 98275. TRAVIS INDUSTRIES, INC. warrants this appliance (appliance is defined as the equipment manufactured by Travis Industries, Inc.) to be defect-free in material and workmanship to the original purchaser from the date of purchase as follows:

Check with your dealer in advance for any costs to you when arranging a warranty call.
Mileage or service charges are not covered by this warranty. This charge can vary from store to store.

Years 1 & 2 - COVERAGE: PARTS & LABOR

Firebox Assembly:
Fire platform, Fire platform Holder, Ash Cleanout Doors, Ashbox or Ash Dump, Heat Exchanger Tubes, Exhaust Manifold, Exhaust Box

Door Assembly:
Door Frame, Latch Assembly, Glass Retainers

Auger Assembly: Auger Flight, Auger Tube, Auger Bushings

Ceramic Glass
Glass (breakage from thermal shock)

Igniter System
Igniter, Igniter Leads

Electrical System Auger Motor, Convection Blower, Exhaust Blower, Circuit Board, Snap Disks, Wiring Harness, Vacuum Switch

Re-Installation Allowance
In cases where heater must be removed from home for repairs, a partial cost of re-installation is covered (pre-authorization required)

One-Way Freight Allowance One-way freight allowance on pre-authorized repair done at factory is covered.

***Exclusions*:** Paint, Gasketing, Chisel

Years 3 Through 5 - COVERAGE: PARTS & LABOR

Firebox Assembly: Fire platform, Fire platform Holder, Ash Cleanout Doors, Ashbox or Ash Dump, Cast Fireback, Heat Exchanger Tubes, Exhaust Manifold, Exhaust Box

Door Assembly: Door Frame, Latch Assembly, Glass Retainers

Auger Assembly Auger Flight, Auger Tube, Auger Bushings

One-Way Freight Allowance One-way freight allowance on pre-authorized repair done at factory is covered.

***Exclusions*:** Paint, Gasketing, Chisel, Ceramic Glass, Igniter System, Electrical System, Cast Iron Parts, Accessories, Re-Installation Allowance

Years 6 & 7 - COVERAGE: PARTS ONLY

Firebox Assembly: Fire platform, Fire platform Holder, Ash Cleanout Doors, Ashbox or Ash Dump, Heat Exchanger Tubes, Exhaust Manifold, Exhaust Box

Door Assembly: Door Frame, Latch Assembly, Glass Retainers

***Exclusions*:** Paint, Gasketing, Chisel, Ceramic Glass, Igniter System, Electrical System, Auger Assembly, Re-Installation Allowance, One-Way Freight Allowance, Labor

CONDITIONS & EXCLUSIONS

1. This new appliance must be installed by a qualified installer. It must be installed, operated, and maintained at all times in accordance with the instructions in the Owner's Manual. Any alteration, willful abuse, accident, neglect, or misuse of the product shall nullify this warranty.
2. This warranty is nontransferable, and is made to the ORIGINAL purchaser, provided that the purchase was made through an authorized Travis dealer.
3. Discoloration and some minor expansion, contraction, or movement of certain parts and resulting noise, is normal and not a defect and, therefore, not covered under warranty.
4. The warranty, as outlined within this document, does not apply to the chimney components or other Non-Travis accessories used in conjunction with the installation of this product. If in doubt as to the extent of this warranty, contact your authorized Travis retailer before installation.
5. Travis Industries will not be responsible for inadequate performance caused by environmental conditions such as nearby trees, buildings, roof tops, wind, hills or mountains or negative pressure or other influences from mechanical systems such as furnaces, fans, clothes dryers, etc.
6. This Warranty is void if:
   a. The unit has been operated in atmospheres contaminated by chlorine, fluorine or other damaging chemicals.
   b. The unit is subject to submersion in water or prolonged periods of dampness or condensation.
   c. Any damage to the unit, combustion chamber, heat exchanger or other components due to water, or weather damage which is the result of, but not limited to, improper chimney/venting installation.
7. Exclusions to this 7 Year Warranty include: injury, loss of use, damage, failure to function due to accident, negligence, misuse, improper installation, alteration or adjustment of the manufacturer's settings of components, lack of proper and regular maintenance, damage incurred while the appliance is in transit, alteration, or act of God.
8. This 7 Year warranty excludes damage caused by normal wear and tear, such as paint discoloration or chipping, worn or torn gasketing, chipped or cracked firebrick, etc. Also excluded is damage to the unit caused by abuse, improper installation, modification of the unit, or the use of fuel other than that for which the unit is configured.
9. Damage to gold or nickel surfaces caused by fingerprints, scratches, melted items, or other external sources left on the gold or nickel from the use of cleaners other than denatured alcohol is not covered in this warranty.
10. TRAVIS INDUSTRIES, INC. is free of liability for any damages caused by the appliance, as well as inconvenience expenses and materials. Incidental or consequential damages are not covered by this warranty. In some states, the exclusion of incidental or consequential damage may not apply.
11. This warranty does not cover any loss or damage incurred by the use or removal of any component or apparatus to or from the Travis appliance without the express written permission of TRAVIS INDUSTRIES, INC. and bearing a TRAVIS INDUSTRIES, INC. label of approval.
12. Any statement or representation of Travis products and their performance contained in Travis advertising, packaging literature, or printed material is not part of this 7 year warranty.
13. This warranty is automatically voided if the appliance's serial number has been removed or altered in any way. If the appliance is used for commercial purposes, it is excluded from this warranty.
14. No dealer, distributor, or similar person has the authority to represent or warrant Travis products beyond the terms contained within this warranty. TRAVIS INDUSTRIES, INC. assumes no liability for such warranties or representations.
15. Travis Industries will not cover the cost of the removal or re-installation of hearths, facing, mantels, venting or other components.
16. If for any reason any section of this warranty is declared invalid, the balance of the warranty remains in effect and all other clauses shall remain in effect.
17. This 7 year warranty is the only warranty supplied by Travis Industries, Inc., the manufacturer of the appliance. All other warranties, whether express or implied, are hereby expressly disclaimed and purchaser's recourse is expressly limited to the warranties set forth herein.

IF WARRANTY SERVICE IS NEEDED:

1. If you discover a problem that you believe is covered by this warranty, you MUST REPORT it to your Travis dealer WITHIN 30 DAYS, giving them proof of purchase, the purchase date, and the model name and serial number.
2. Travis Industries has the option of either repairing or replacing the defective component.
3. If your dealer is unable to repair your appliance's defect, he may process a warranty claim through TRAVIS INDUSTRIES, INC., including the name of the dealership where you purchased the appliance, a copy of your receipt showing the date of the appliance's purchase, and the serial number on your appliance. At that time, you may be asked to ship your appliance, freight charges prepaid, to TRAVIS INDUSTRIES, INC. TRAVIS INDUSTRIES, INC., at its option, will repair or replace, free of charge, your appliance if it is found to be defective in material or workmanship within the time frame stated within this 7 year warranty. TRAVIS INDUSTRIES, INC. will return your appliance, freight charges (years 1 to 5) prepaid by TRAVIS INDUSTRIES, INC., to your regional distributor, or dealership.
4. Check with your dealer in advance for any costs to you when arranging a warranty call. Mileage or service charges are not covered by this warranty. This charge can vary from store to store.

Index

Adjust the Door Cam 41
Alcove Installation Requirements 14
Before You Begin 8
Changing the TSTAT Program 26
Check for Air Leaks Around the Door, Glass, and Ashdump 41
Checking the Ashpan 36
Chisel Inspection & Replacement 41
Clean the Convection Blower 39
Clean the Fire platform 30
Clean the Firebox Liners 34
Clean the Glass 35
Clean the Heat Exchange Tubes 33
Clean the Lower Exhaust Duct 37
Clean the Vent 40
Clearances 10
Corner Installations 10
Curing the Paint 22
Dimensions 7
Disposing Ashes 28
Efficiency 7
Electrical Specifications 7
Emissions 7
Floor Protection Requirements 9
Fuel 7
Heating Specifications 7
Important Information 2
Inspect the Burn 30
Installation Example: Class “A” Chimney Retrofit 17
Installation Example: Direct "Through-the-wall" Installation 15
Installation Example: Freestanding Masonry Chimney 20
Installation Example: Interior Vertical Installation 16
Installation Example: Masonry Fireplace Hearth Stove 18
Installation Example: Zero-Clearance (Metal) Fireplace Hearth Stove 19
Installation Options 8
Installing the Pellet Vent 12
Introduction 2
Loading Pellets 22
Location of Controls 21
Manual Mode 23
Maximum Venting Distance 11
Mobile Home Requirements 13
Opening the Door 29
Outside Air 13
Packing List 8
Pellet Vent Termination 12
Pellet Vent Type 12
Planning the Installation 9
Power Outages 27
Restrictor Adjustment 14
Safety Notice 21
Starting the Heater for the First Time 22
Start-Up Sequence 27
Stove Maintenance 28
Stove Maintenance Tools 29
Stove Placement 9
Stove Tool Storage 29
Straight Installations 10
Thermostat Installation 44
Troubleshooting Table 42
Tstat Mode 25
Venting the Pellet Stove 11
Yearly Maintenance - Clean the Negative Pressure Tube 40