PIAZZETTA

English

# Pellet Stove

# P958

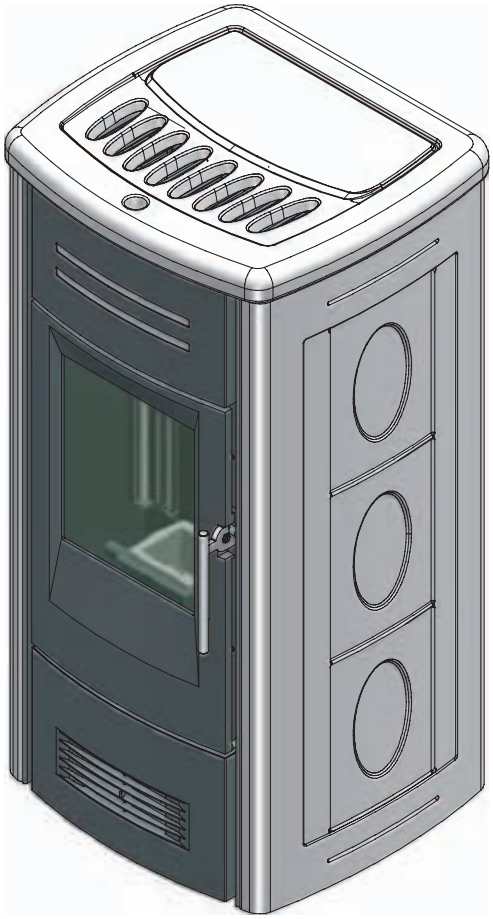

*The instruction manual is an integral part of the product.*

INSTRUCTIONS FOR INSTALLATION,
USE AND MAINTENANCE

*Dear Customer,*
*Thank you for having chosen one of our products, which is the result of years of experience and continuous research aimed at making a superior product in terms of safety, reliability and performance.*
*This booklet contains information and advice for safe and efficient use of your product.*

DT2010001-01

English

# IMPORTANT INFORMATION

DT2010208-07

- This instruction booklet has been prepared by the manufacturer and is an integral part of the product. In the event of sale or relocation of the product make sure this booklet accompanies it, since the information contained in it is intended for the purchaser and for anyone involved in the installation, use and maintenance of the product.
- Read the instructions and the technical information contained in this booklet carefully before proceeding with installation, use or any repairs.
- The observance of the instructions and technical information in this instruction booklet guarantees the safety of persons and property; it also ensures more efficient operation and an increased lifespan.
- Gruppo Piazzetta S.p.A. cannot be held responsible for damage or injury due to failure to comply with the instructions for installation, use and maintenance given in this booklet, or due to unauthorised alterations or to the use of other than original spare parts.
- Appliance installation and use must conform with the manufacturer's instructions as well as with European and national legislation and local regulations.
- Installation, electrical connection, checks, maintenance and repairs are operations which must be carried out exclusively by qualified and authorised personal with specialised knowledge of the product.
- The wall against which the product is to be placed must not be of wood or any other flammable material. For correct installation it is also important to comply with the section entitled "**MINIMUM SAFETY DISTANCES**".
- Before installing the product read all instruction booklets relevant to the cladding, the ventilation kit and any other accessory.
- Check that the floor where the product is to be installed is perfectly level.
- When handling the steel parts of the cladding it is advisable to use clean cotton gloves to avoid leaving fingerprints that are difficult to remove at first time of cleaning.
- The stove must be assembled by at least two persons.
- Connect the pellet stove to the electricity supply only after it has been connected by an expert to the flueway.
- The plug at the end of the power cable must be easily accessible after installation.
- Use only recommended wood pellets in the pellet stove (refer to section entitled "**FUEL**").
- Never use liquid fuels to light the pellet stove or to relight the embers.
- Ensure that the area where the stove is installed is properly ventilated while the stove is lit.
- In the event of malfunctioning the fuel supply will be stopped. Restart the stove only after having eliminated the cause of the malfunction.
- Stop using the product in the event of fault or malfunctioning.
- Do not remove the protective grille from the pellet hopper.
- Any build-up of unused pellets in the burner left over from repeated failed ignitions must be removed before attempting to light the stove again.
- Stove operation can result in surfaces, handles, flue pipe and glass becoming extremely hot. When the stove is in operation, only touch these parts if wearing protective clothing otherwise use suitable tools.
- Because of the build-up of heat on the glass, take care that those who are unfamiliar with stove operation do not linger near the stove.
- This appliance must not be used by persons (including children) with reduced physical, sensory or mental capacities, or lack of experience or knowledge unless they are supervised or instructed on use of the appliance by the person who is responsible for its safety.
- Creaking may be heard while the stove is in operation or cooling down. This is not to be considered a defect, but is a consequence of thermal expansion of the component materials.
- The product you have purchased may different slightly from the one illustrated in this booklet since the pictures are only given as an indication and not an exact portrayal.

⚠ **In the event of difficulties or if you are unable to understand the instruction booklet, contact your local dealer.**

⛔ **Do not place objects which are not heat-resistant on top of the stove or within the recommended minimum safety area.**

⛔ **Do not open the door while the stove is in operation or operate the stove when the glass is broken.**

See the guarantee certificate enclosed with the product for the terms, limitations and exclusions.
In line with its policy of constant product improvement and renewal, the manufacturer may make changes without notice.

# CONTENTS





This booklet code H07026300 / DT2000786 - 00 (02/2011) comprises 60 pages.

English

# 1.0 GENERAL RULES

DT2010216-05

**Ensure that the installation of your product conforms to all the indications given below.**

Fig. 1

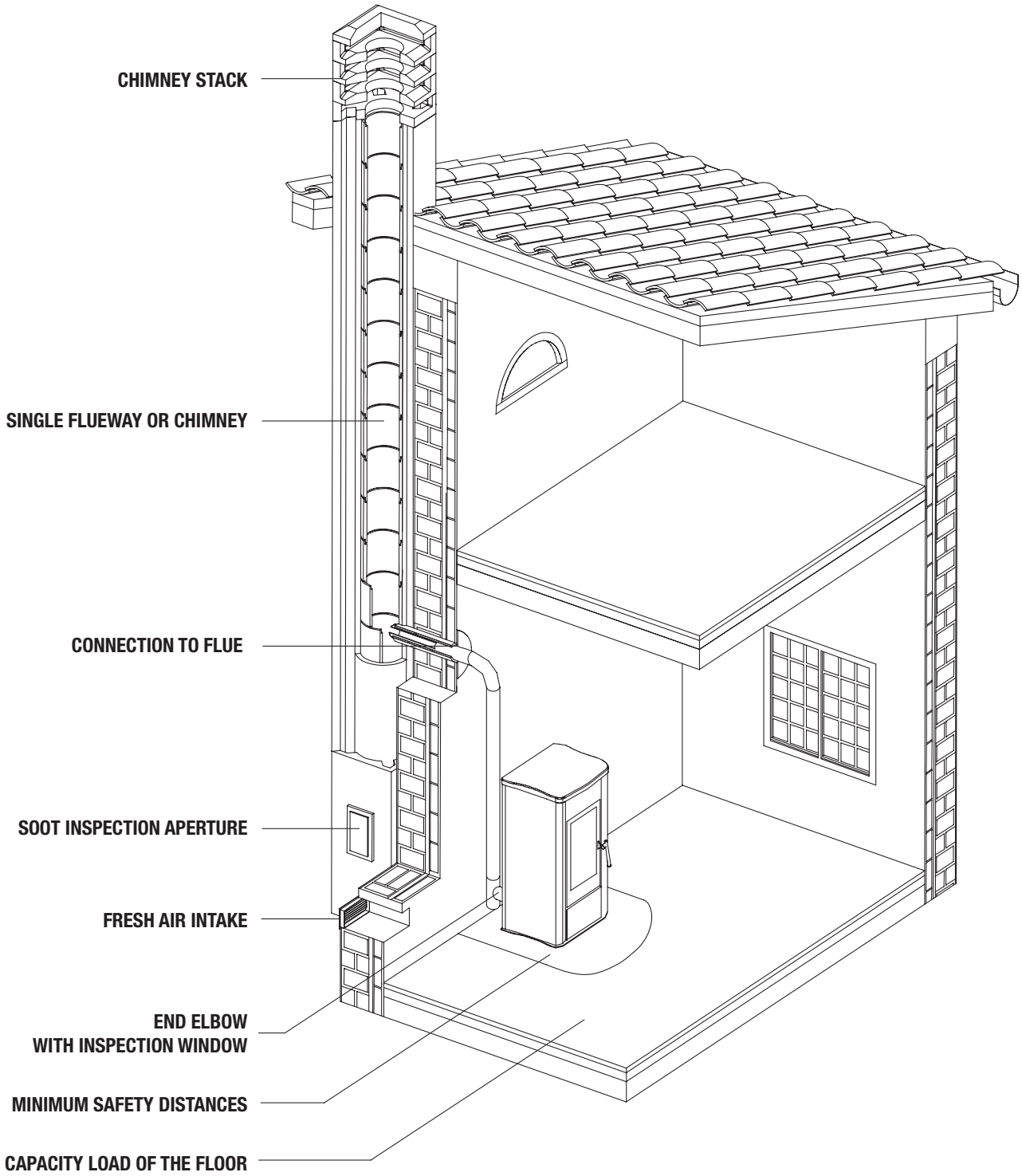


DT2030321-00

## 1.1 SINGLE CHIMNEY OR FLUEWAY

Every appliance must have a vertical flue pipe operating by natural draught to discharge the combustion gases outdoors.
The flue must:
- comply with regulations in force in the place of installation of the appliance;
- be tight to the products of combustion, waterproof, suitably insulated, made with materials resistant to the corrosion of the gases and to stress;
- be connected to just one stove, fireplace or extraction hood (Fig. 2);
- be properly sized, with constant free internal section, equal to or greater than the diameter of the flue pipe of the stove and at least 3.5 m in length (Fig. 2);
- be mainly in a vertical position with a deflection from the axis of no more than 45° (Fig. 2);
- be at a suitable distance from combustible or flammable materials, ensured by an air gap or suitable insulating material;
- be of uniform internal section, preferably round. Square or rectangular sections must have rounded corners with a radius of at least 20mm and a maximum ratio between the sides of 1.5 (Fig. 3-4-5);
- the walls must be smooth if possible and without narrowing; bends must be regular and without discontinuity (Fig. 6).

Fig. 2

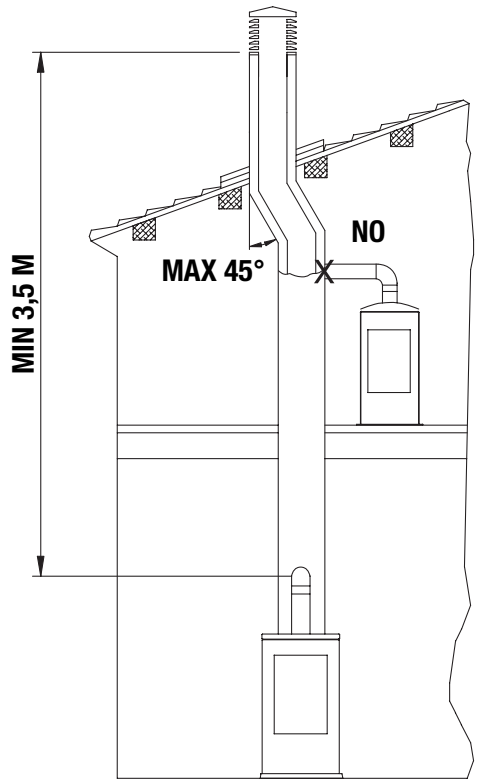


DT2030049-00

English

**It is forbidden to make fixed or mobile apertures on the flue pipe to connect appliances other than the one to which it is already connected.**

**It is forbidden to pass other air ducts or service pipes inside the flue pipe, however large it is.**

**If the flue pipe is an incorrect size or installed other than in compliance with the above instructions, Gruppo Piazzetta S.p.A. cannot be held liable for malfunctioning of the product, damage to property or injury to persons or animals.**

Fig. 3

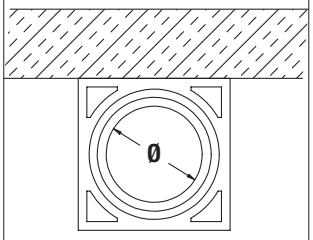


DT2030050-00

Fig. 4

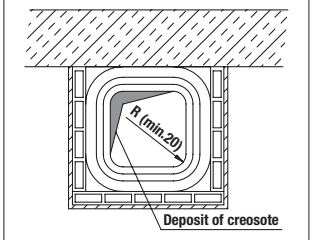


DT2030188-00

Fig. 5

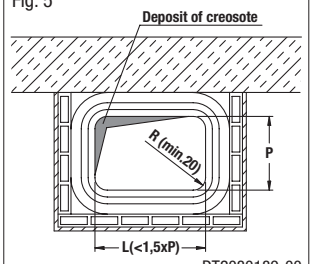


DT2030189-00

Fig. 6

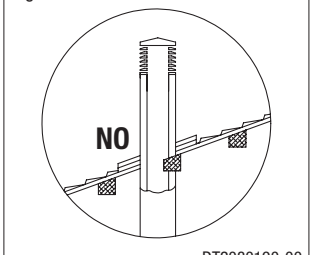


DT2030190-00

## 1.2 SOOT INSPECTION

DT2010031-01

We recommend that the flue must have a chamber for collecting solid matter and any condensate located below the connection and which may be easily inspected by means of an airtight door. (Fig. 1)

## 1.3 CHIMNEY STACK

English

The chimney stack is a device fitted on the top of the chimney that is designed to aid dispersion of the products of combustion in the atmosphere.
The chimney stack must comply with the following requirements:
- it must have an internal section and shape the same as the flue (A);
- it must have a useful outlet section (B) of not less than twice that of the flue (A);
- the part of the chimney that emerges from the roof or remains in contact with the outside (e.g. in the case of a flat roof), must be covered with brick or tile elements and in any case well insulated;
- it must be built in such a way as to prevent the penetration of rain, snow and foreign matter into the flue and to ensure that in the event of winds from all directions and angle, discharge of the combustion products is assured (chimney stack with down-draught cowl).

Fig. 7

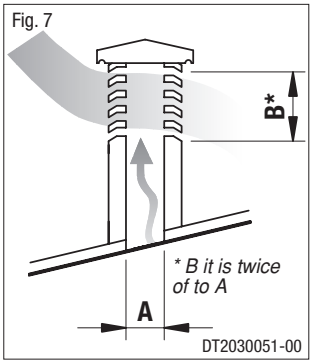


Fig. 8

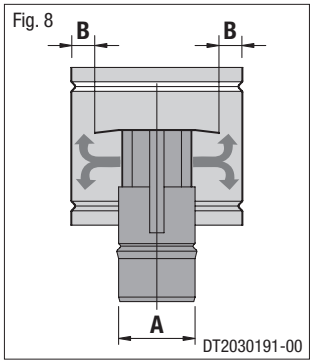


**Recommended distances for correct chimney operation.**
To ensure trouble-free operation of the chimney and allow correct dilution of the products of combustion in the air, the chimney stack must be installed at the distances given below:
- 6-8 metres from any buildings or other obstacles that are higher than the chimney stack;
- 50 centimetres higher than any obstacles located at a distance less than 5 metres;
- outside the reflux area. The size and shape of this area differ according to the angle of inclination of the roof and it is therefore necessary to adopt the minimum heights shown below.

***Example:*** *Check the slope of the roof (**column** α), and the anticipated distance of the chimney stack from the axis of the ridge (**column A**), if the distance is greater than "**A**" the height of the chimney stack may be read in (**column H**); if the distance is less than "**A**" the chimney stack must rise above the ridge by 0.5 metres.*

Fig. 9

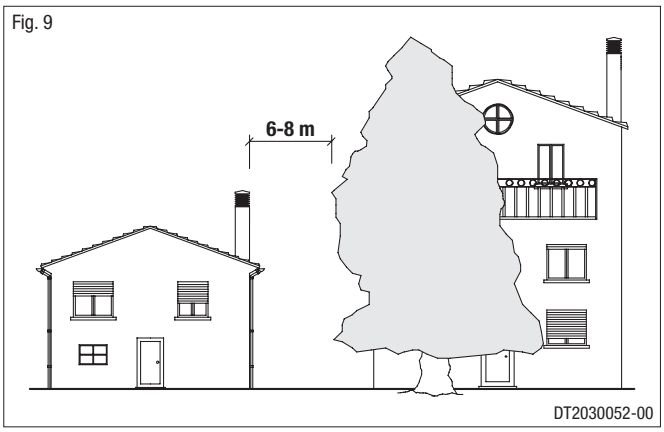


Fig. 10

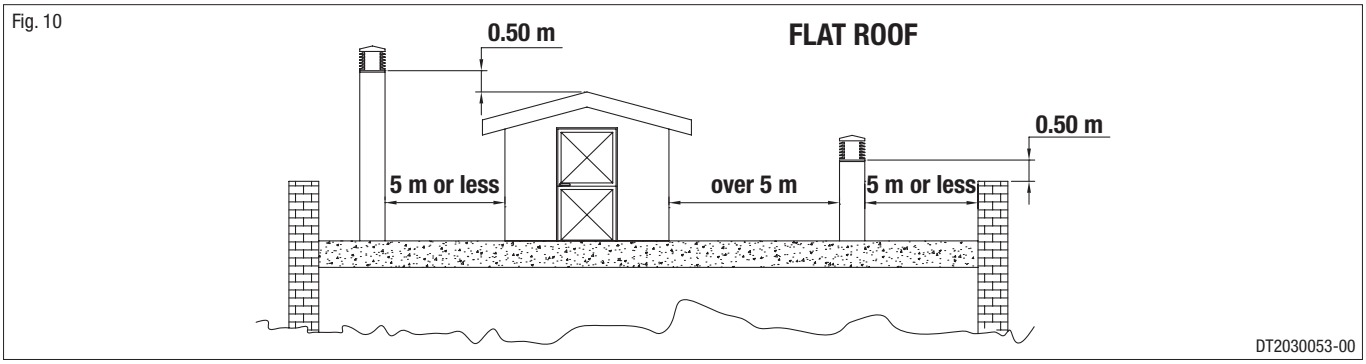


Fig. 11

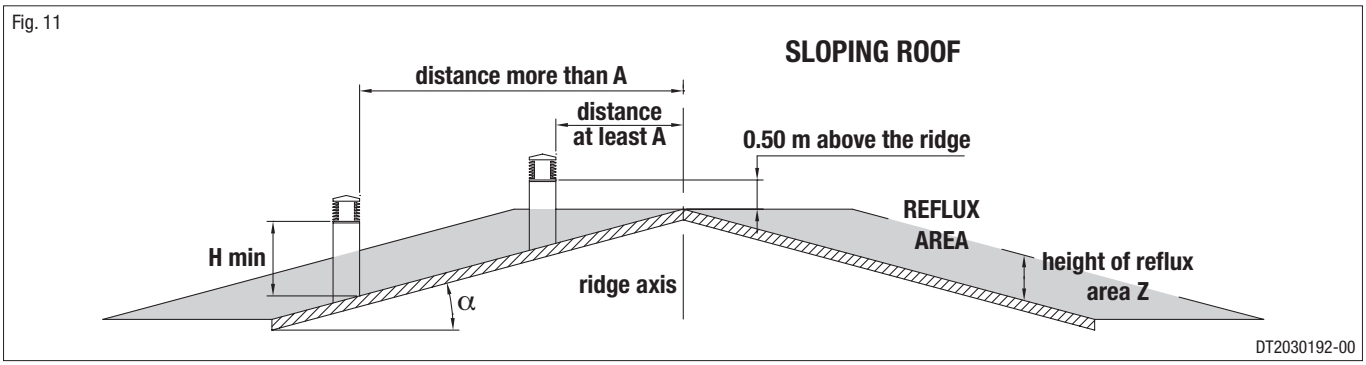


| Pitch of the roof | Horizontal width of reflux area from ridge axis | Minimum height of outlet from roof | Height of reflux area |
|---|---|---|---|
| α | A | H | Z |
| 15° | 1.85 m | 1.00 m | 0.50 m |
| 30° | 1.50 m | 1.30 m | 0.80 m |
| 45° | 1.30 m | 2.00 m | 1.50 m |
| 60° | 1.20 m | 2.60 m | 2.10 m |

## 1.4 FRESH AIR INTAKE

To ensure trouble-free operation the stove/fireplace must have the necessary air available for combustion and this is provided through the fresh air intake.
The fresh air intake must:
- have a total free cross section at least equal to the size given in the paragraph "**TECHNICAL DATA**";
- be protected by a grille or suitable guard provided it does not reduce the minimum recommended section;
- be in a position whereby it cannot be obstructed.

Fig. 12

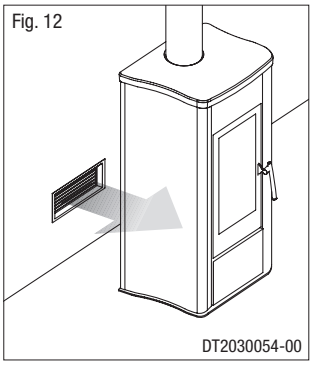

DT2030054-00

Fig. 13

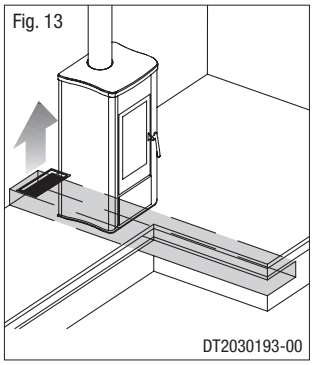

DT2030193-00

English

The airflow necessary for the fire may be obtained in different ways:
- through a fresh air intake direct into the room of installation;
- with ducting through pipes direct to the room of installation, increasing the recommended minimum free cross section by at least 15%;
- from an adjacent room to the place of installation provided this air flows freely through permanent apertures communicating with the outside.

Fig. 14

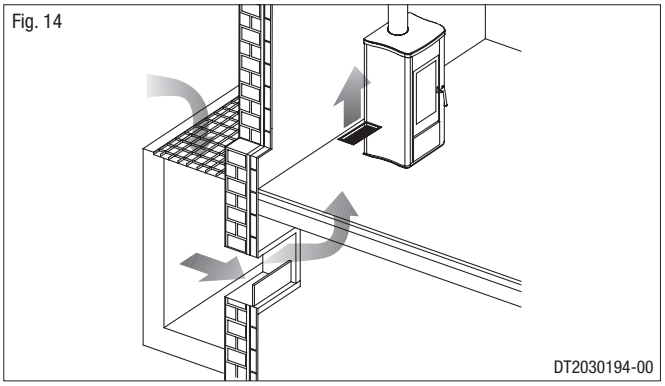

DT2030194-00

⚠ **The adjacent room from which air is taken must not have a low pressure compared to the exterior due to a counter draught caused by the presence in that room of another appliance in use or of a suction device.**
**The permanent apertures in the adjacent room must comply with the requirements given above.**

⛔ **Combustion air must not be taken from adjacent rooms used as a garage or a combustible materials store or for activities posing a fire hazard.**

Fig. 15

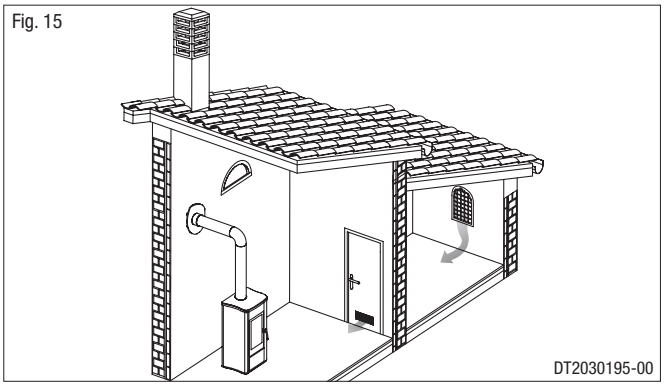

DT2030195-00

## 1.5 INSTALLATION ENVIRONMENT

DT2010033-01

The appliance should be installed in a location which allows safe and convenient use as well as easy maintenance. If the product being installed requires an electrical socket, the room must also be provided with an earthed power supply in accordance with current regulations.
The room where the appliance is to be installed must comply with the following requirements:

⚠ **They must not be used as a garage, store for combustible material or for activities with a risk of fire.**

⚠ **They must not be in a vacuum in relation to the outside environment due to the effect of contrary draught caused by the presence in the room where the fi replace is installed of another appliance or an extractor device.**

⚠ **Do not use two stoves, a fireplace and a stove, a stove and a wood-fired cooking range, etc. in the same environment, since the draught of one could affect the draught of the other.**

• Devices suitable for cooking food with relative hoods without an extractor fan may only be used in kitchens.
• Gas appliances of type C are allowed (refer to current legislation and regulations in the place of installation).

⛔ **Gas appliances of type B are not allowed (refer to current legislation and regulations in the place of installation).**

⛔ **The stove or fireplace must not be used simultaneously with collective type ventilation ducts with or without extractor fan, other devices or other appliances such as: forced ventilation systems or other heating systems using ventilation to change the air. Such systems could cause a vacuum in the environment of installation even if installed in adjoining or communicating rooms.**

⛔ **The stove or fireplace must not be used: in stairwells except in buildings with no more than two apartments; in corridors for common use; in bedrooms; in bathrooms or shower-rooms.**

English

## 1.6 CAPACITY LOAD OF THE FLOOR

DT2010032-00

Check the load-bearing capacity of the floor, referring to the weight of the product given in the paragraph "**TECHNICAL DATA**".
If the floor does not have a suitable load-bearing capacity, adequate countermeasures must be taken.

## 1.7 HEATING CAPACITY

DT2010130-01

Check the heating capacity of the appliance by comparing the rated power given in the paragraph "**TECHNICAL DATA**" with the power required by the environment to be heated.
The energy requirement may be calculated approximately by multiplying the square metres of area by the height of the ceiling; the result is then multiplied by a coefficient, which depends on the degree of insulation of the building, that is, on internal and external factors of the dwelling:
- **Internal factors:** type of window and door frames, thickness of the insulation and walls, type of building materials, presence of stairwells, walls with extensive glazing, high ceilings, position of the rooms to be heated in relation to other adjacent heated or unheated rooms, ….
- **External factors:** geographical position, average outdoor temperature, exposure, wind speed, latitude, altitude,…

***Example of approximate calculation of the energy requirement to heat a fixed volume to 18/20° C:***
*The **coefficient** that is normally **used** is determined according to the real conditions as they occur case by case.*
• From ***0,04*** to ***0,05 kW*** per cubic metre in a ***well insulated environment***.
• From ***0,05*** to ***0,06 kW*** per cubic metre in a ***poorly insulated environment***.

***3 rooms measuring 20 m² X (H ceiling) 2.7 m = 162 m³ (volume)***
*In an environment with a good degree of insulation, an average value (coefficient) of 0.045 kW may be taken*
***162 (volume) X 0,045 (kW) = 7,3 kW necessary (6300 kcal/h)***
*Conversion 1kW = 860 kcal/h*

⚠ **Consult a heating technician or engineer for a correct check and calculation of the requirement of the environments to be heated (see "REFERENCE STANDARDS").**

⚠ **Rated power being equal, products with the Multi-fire system can evenly distribute heat throughout the rooms to be heated.**

## 1.8 MINIMUM SAFETY DISTANCES

Install the product in compliance with the recommended safety distances from heat sensitive or inflammable materials and not inflammable, from load bearing and other walls and also from wooden elements, furniture, etc.
In the case of flooring that is heat sensitive or inflammable the floor must be protected with non-combustible insulating material, e.g. sheets of steel plate, marble, tiles, etc.
The minimum distances are:

| | |
|---|---|
| A | 10 cm from the wall behind the stove |
| B | 20 cm from the side wall |
| C | 80 cm in the heat radiation area and from the hot air fan outlet |
| D | 50 cm floor protection |
| E | 30 cm (measured from the inner edge of the door) |
| F* | 5 cm from the flue gas outlet on the rear wall |

Fig. 16

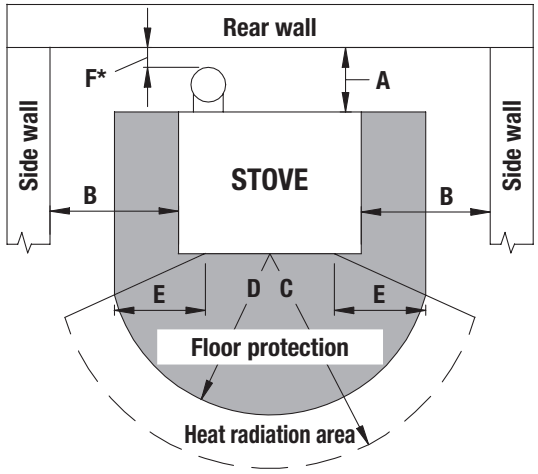


DT2032225-00

Connection to the flue must respect minimum safety distances from heat-sensitive structural components or inflammable materials (wood panelling, beams or ceilings, etc) shown in figures.

* = Values referred to the use of original Gruppo Piazzetta flue pipes; if other pipes are used, the safety fire regulations or fire codes of reference are applicable.

⚠ **Keep any combustible product such as wooden furniture, curtains, carpets, combustible liquids, etc. well away from the stove when it is lit (minimum distance 80 cm).**

⚠ **It is recommended that greater distances than those indicated above be left all round the stove to make any necessary work on the appliance easier.**

Fig. 17

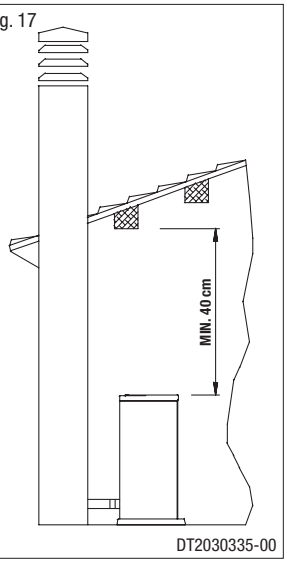


DT2030335-00

Fig. 18

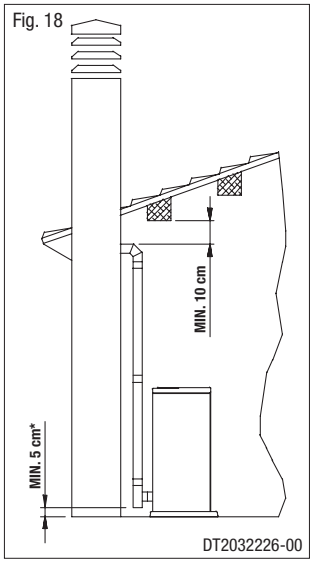


DT2032226-00



## 1.9 FLUEWAY

⚠ **The pellet stove is not the same as other stoves. It has a forced draught of flue gas by a fan, which keeps the firebox in a vacuum and the entire flueway slightly pressurised. For this reason the flue must be completely airtight and correctly installed to ensure both trouble-free operation and user safety.**

- The flueway **must be made** by specialised personnel or firms, as outlined below.
- The flue must be installed in such a way as to guarantee that periodic cleaning can be carried out without dismantling any parts whatsoever.
- Pipes should **always** be sealed with silicone (**not cement-based sealants**) or specially adapted gaskets/seals, which retain their strength and elasticity at high temperatures (250°C), and should be fixed with 3.9 mm ø self-tapping screws.

⚠ **Using the relative pipe clips, fix the flue to the wall so that it does not weigh on the smoke fan.**

⛔ **Do not install dampers or valves that could block the passage of flue gas.**

⛔ **Do not connect to a flueway into which other appliances (boilers, extractor hoods, etc.) discharge fumes or vapours.**

English

English

**Pipes and maximum usable lengths**

Pipes of painted aluminium-clad steel (minimum thickness 1.5mm), stainless steel (AISI 316) or enamelled steel (minimum thickness 0.5mm) with a nominal diameter of 80 or 100 mm (for pipes which run inside the flue maximum diameter 150 mm) can be used.

The male-female connectors must have a minimum length of 50 mm.

The diameter of the pipes depends on the type of installation. The stove was designed to take 80 mm diameter pipes but, as shown in Table 1, in some cases the use of double-lined 100 mm diameter pipes is recommended.

| TABLE 1 PIPE LENGTH | | |
|---|---|---|
| **TYPE OF INSTALLATION** | **WITH 80 mm DIAMETER PIPE** | **WITH DOUBLE-WALLED 100 mm DIAMETER PIPE** |
| Maximum length (with three 90° bends) | 4.5 m | 8 m |
| For installations more than 1200m above sea level | - | Required |
| Maximum number of bends | 3 | 4 |
| Length of horizontal sections with minimum 3% gradient | 2 m | 2 m |

⚠ **Losses in pressure associated with a 90° bend can be compared to those incurred by one metre of pipe. An inspectable union-tee can be considered equivalent to a 90° bend.**

***EXAMPLE:*** *if installing a section greater than 4.5 m in length with 80 mm diameter pipe, calculate the maximum usable length in the following ways:*

- If a maximum of **three 90° bends** are used, the maximum length of the section will be **4.5 m**.
- If a maximum of **two 90° bends** are used and bearing in mind that a 90° bend can be replaced by one metre of pipe, the maximum length of the section will be **4,5 m+1 m=5,5 m**.
- If a maximum of **one 90° bend** is used and bearing in mind that a 90° bend can be replaced by one metre of pipe, the maximum length of the section will be **4, 5m+1 m+1 m=6,5 m**.

Where 100 mm diameter pipe must be used, connect it to the stove flue outlet with a 80 mm union-tee then use a 80 mm/100 mm adaptor (not supplied by Piazzetta) (Fig. 19).

**Union-tee**

The use of this type of fitting must allow for the collection of condensate mixed with soot, which builds up inside the pipe. It must also permit periodic cleaning of the flue without the need to disassemble the pipes. This type of fitting can be bought at Piazzetta retail outlets together with the pipes.

An example is given below of a flueway connection, which allows complete cleaning without having to disassemble the pipes (Fig. 20).

Fig. 19

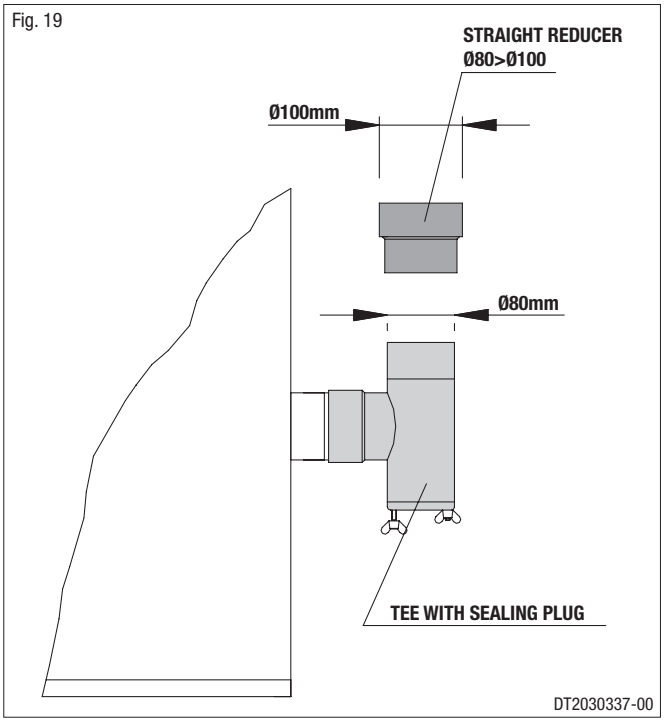


Fig. 20

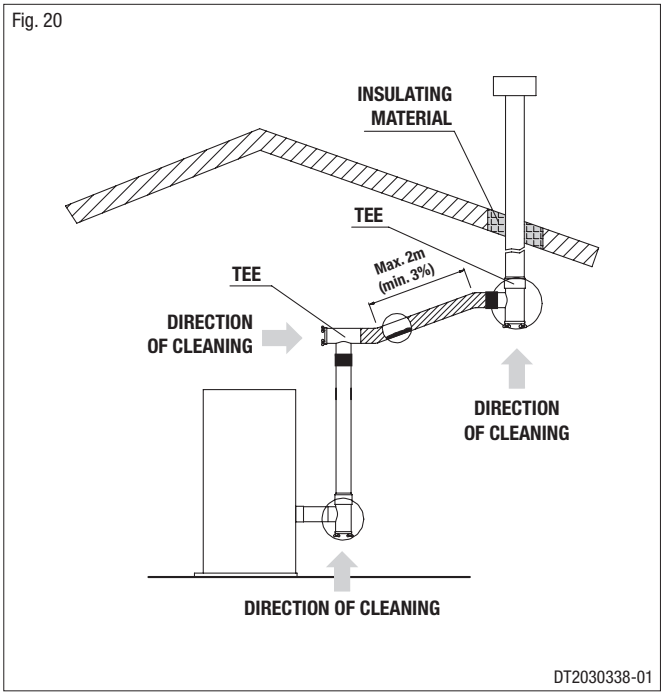

## 1.10 CONNECTING TO A CONVENTIONAL CHIMNEY

If you wish to use an existing chimney it is strongly recommended that you have it checked by a professional chimneysweep to ensure that it is completely airtight. The reason for this is that the smoke, because it is slightly pressurised, can infiltrate any cracks in the flue and escape into living spaces. If upon inspection you find that the chimney is not completely sound, it is recommended that you insert piping made of new material. If the existing chimney is wide enough we recommend a pipe with a maximum diameter of 150 mm. It is also recommended that you insulate the chimney flue (Fig. 21-22).

Pipes and bends made by Gruppo Piazzetta S.p.A. are recommended for connection to the flueway, since they are sized to fit the flue outlet of the appliance.

Other pipes may be applied after adaptation and checking of the compatibility of the coupling, taking into account that the pipes and bends must be made in compliance with current regulations. In this case, however, Gruppo Piazzetta S.p.A. only guarantees trouble-free operation for parts that it manufactures and that are used according to specifications.

- If the connector has to pass through partitions or walls of inflammable or heat-sensitive materials, or through load-bearing walls, create an insulating barrier equal to or greater than 10cm around the connector using mineral-based insulating material (rock wool, ceramic fibre) with a nominal density greater than 80 kg/m$^3$.

- If the connector has to pass through **non-flammable partitions or walls**, create an insulating barrier equal to or greater than 5cm around the connector using mineral-based insulating material (rock wool, ceramic fibre) with a nominal density greater than 80 kg/m$^3$.

- Check that the connection to the flueway is gas/smoke-tight, since the appliance operates in a vacuum.

- Check that the pipe does not penetrate too far into the flueway, thereby choking the pipe for the passage of smoke and combustion gases.

⚠ **Ensure that all installation work is carried out to professional standards.**

Fig. 21

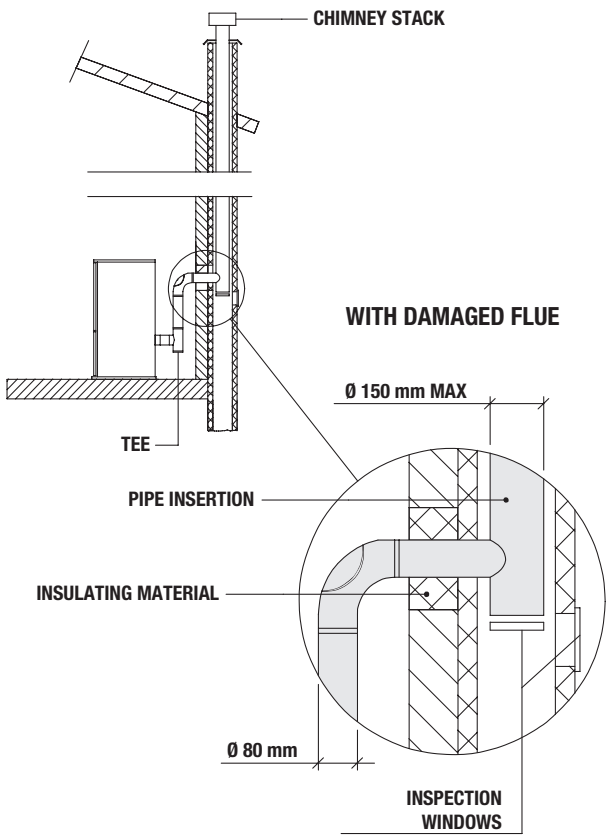


DT2030339-01

Fig. 22

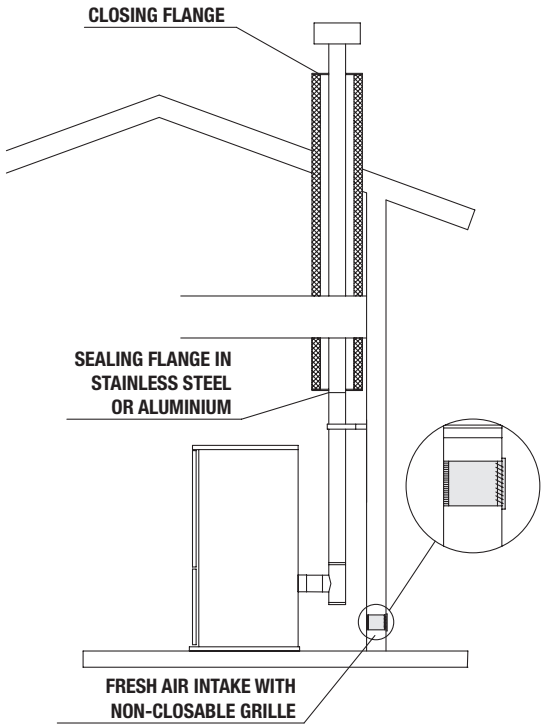


DT2030340-00

English

## 1.11 USING AN EXTERNAL FLUE

DT2010232-02

English

An external flue can be used provided it complies with the following requirements:
- use only insulated stainless steel pipes (double-lined) fixed to the outside wall of the building (Fig. 23);
- there must be an inspection opening at the base of the flue to permit periodic checks and maintenance;
- the flue must be fitted at the top with a chimney stack with down-draught cowl, also ensuring compliance with the safety distance from the roof ridge as outlined in the section entitled "**CHIMNEY STACK**".

⚠ **Ensure that all installation work is carried out to professional standards.**

Fig. 23

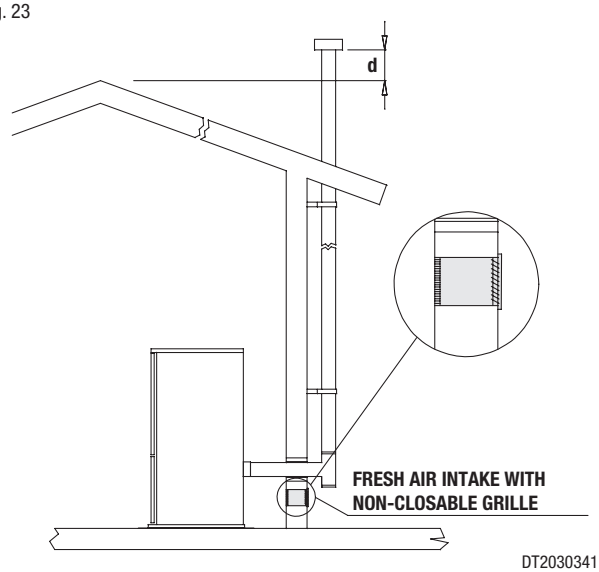


DT2030341-00

## 1.12 PREVENTION OF DOMESTIC FIRES

DT2010027-02

The product must be installed and used in compliance with the manufacturer's instructions and European and national standards as well as local regulations.

⚠ **When a flue pipe passes through a wall or a ceiling, special installation methods must be applied (protection, thermal insulation, distances from heat-sensitive materials, etc.) See the paragraph "CONNECTING TO A CONVENTIONAL CHIMNEY".**

- It is also recommended that all elements made of combustible or inflammable material, such as beams, wooden furniture, curtaining, flammable liquids, etc. be kept outside the heat radiation range of the stove and at a distance of at least 80 cm from the heating block.
- For other information, see the paragraph "**MINIMUM SAFETY DISTANCES**" and "**CONNECTING TO A CONVENTIONAL CHIMNEY**".
- The flue pipe, chimney stack, chimney and fresh air intake must always be free of obstructions, clean and checked periodically, that is, at least twice during the seasonal period from the lighting of the stove and during its use. When the stove has not been used for some time it is advisable to carry out the checks mentioned above. For further information, consult a chimneysweep.
- Only use recommended fuels (See section "**FUEL**").

# 2.0 TECHNICAL CHARACTERISTICS AND SPECIFICATIONS

DT2012007-00

## 2.1 FEATURES

DT2010698-00

Cladding: ..... in hand-made majolica
Front panel: ..... in steel with grey enamel finish
Interior: ..... in steel
Baffle plate and hearth: ..... in cast iron
Grate: ..... in cast iron
Door: ..... in cast iron with ceramic glass heat resistant up to 750°C
Handle: ..... in steel with nickel-plated finish
Control panel: ..... remote control with LCD and digital control panel on stove
Timer thermostat: ..... standard with daily, weekly and weekend programming modes divided into two time bands
Power setting: ..... from 1 to 4
Ash drawer: ..... removable
Fuel: ..... natural pure wood pellets (see section "**FUEL**")
Heating: ..... forced ventilation with the Multifuoco System, three fan settings, possibility of operation with room temperature setting as measured by the remote control (see section "**MULTICOMFORT**"), front hot air outlet at bottom, set-up for ducting outlet at rear (see section "**MULTIFUOCO SYSTEM**")
Humidifier: ..... stainless steel (contains 20 cl water).

English

## 2.2 TECHNICAL DATA

DT2012006-00

| | Unit | P958 | |
|---|---|---|---|
| | | (at rated power) | (at minimum power) |
| Rated / minimum thermal power | kW | 8.5 / 2.6 | |
| Hourly fuel consumption | kg/h | 1.8 | 0.6 |
| Efficiency | % | 89.1 | 89.0 |
| CO content (with 13% $O_2$) | % | 0.011 | 0.057 |
| Maximum power rating | W | 380 | |
| Power rating at work | W | 100 | |
| Electrical power supply | V | 230 | |
| Frequency | Hz | 50 | |
| Fuel tank capacity | kg / (l) | 16 / (25) | |
| Exhaust outlet diameter | cm | ø8 | |
| Fresh air intake with minimum useful section | $cm^2$ | 100 | |
| Weight with cladding | kg | 148 | |
| Packing sizes (DxWxH) | cm | 55x60x116 | |

Data obtained under laboratory conditions with pellets of heat production rated at 5 kwh/kg.
**N.B.: The above data may vary according to the characteristics of the pellets being used. (See section "FUEL").**

**Technical data for flue calculations**

| | Unit | P958 | |
|---|---|---|---|
| | | (at rated power) | (at minimum power) |
| Rated / minimum thermal power | kW | 8.5 / 2.6 | |
| Mass of smoke | g/s | 6.65 | 4.40 |
| Average temp. smoke in gas outlet pipe | °C | 160.0 | 100.0 |
| Minimum draught | Pa | 12 | |

## 2.3 ACCESSORIES AND EQUIPMENT

DT2012008-01

| Description | |
|---|---|
| NTC 10K room sensor | Provided |
| Cable Schuco IEC L=200 | Provided |
| LCD-display remote control | Provided |
| Grate baffle plate | Provided |
| Air flap adjustment handle | Provided |
| Humidifier | Provided |
| Grey silicone paint spray | Optional |
| Pipes and elbows for connection to the flueway | Optional |
| Floor protection | Optional |
| GPRS module for remote stove control | Optional |
| Combustion air connector | Optional |

## 2.4 PRODUCT IDENTIFICATION DATA

DT2011541-00

Every product is identified by a rating plate showing the model and the performance of the appliance as well as a plate giving the serial number.
The rating plate is located on the rear panel of the stove, while the plate with the serial number is located on the underside of the hopper lid.
A label bearing the serial number is also applied on the cover last page of the “Installation, operation and maintenance” booklet.
Always give the information shown on these plates to the dealer or the Service Centre when requesting service or spare parts.

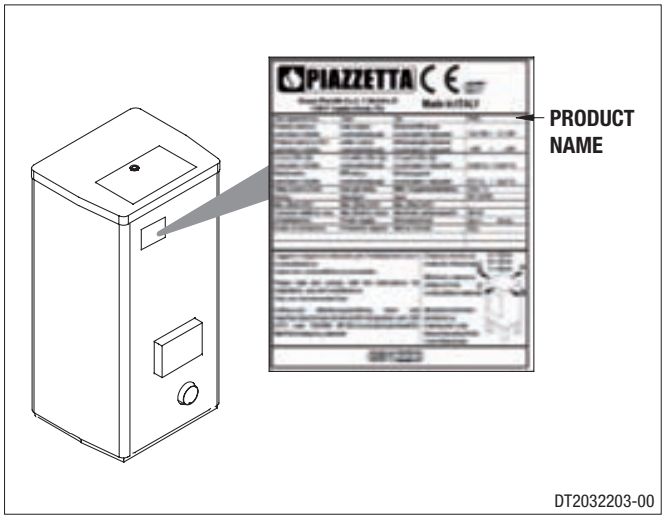


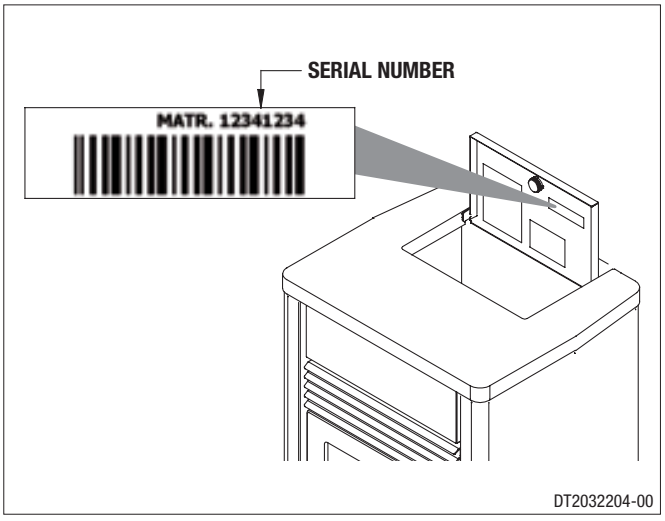

## 2.5 DIMENSIONAL DIAGRAM P958

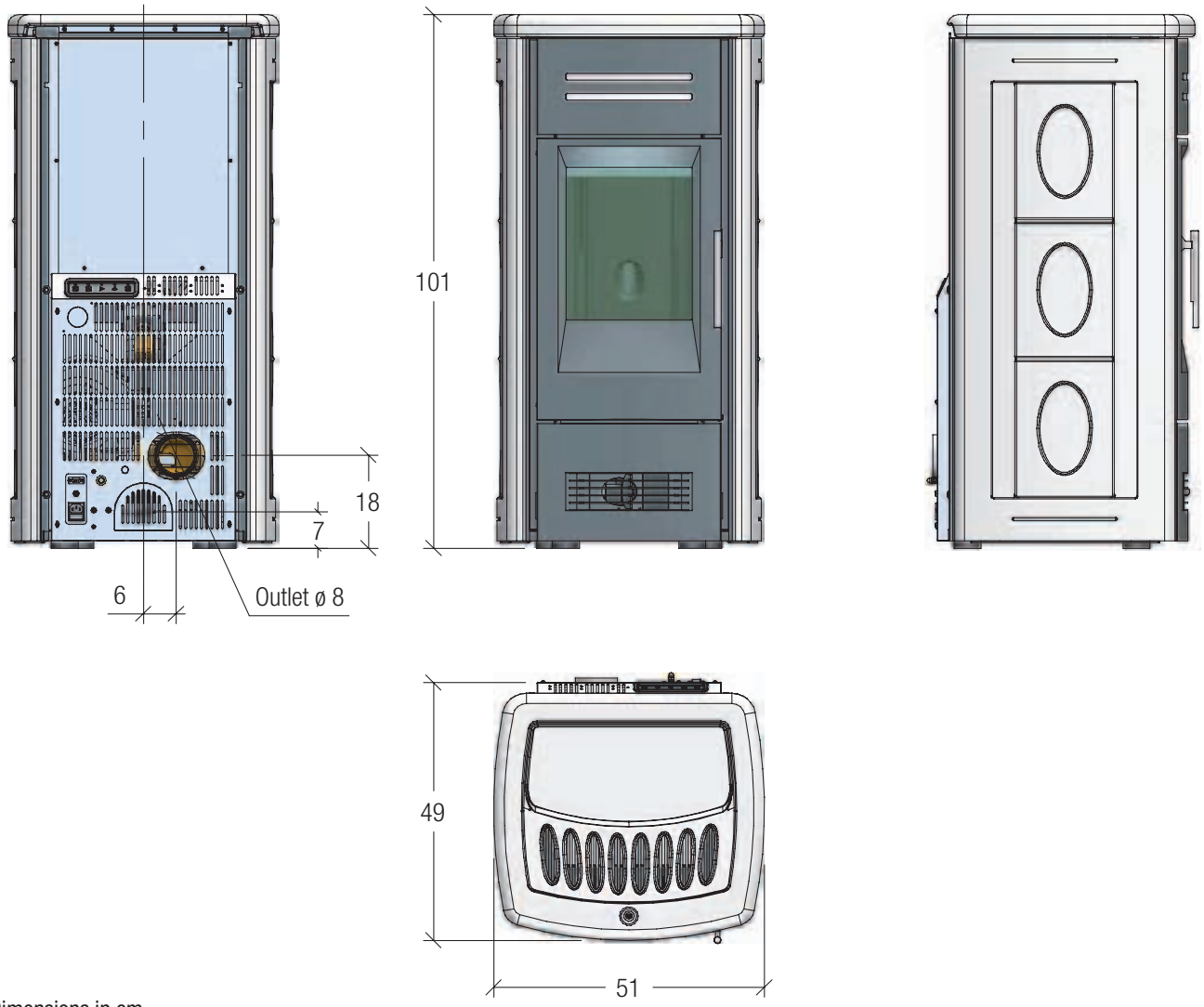


Dimensions in cm

## 2.6 WIRING DIAGRAM P958

English

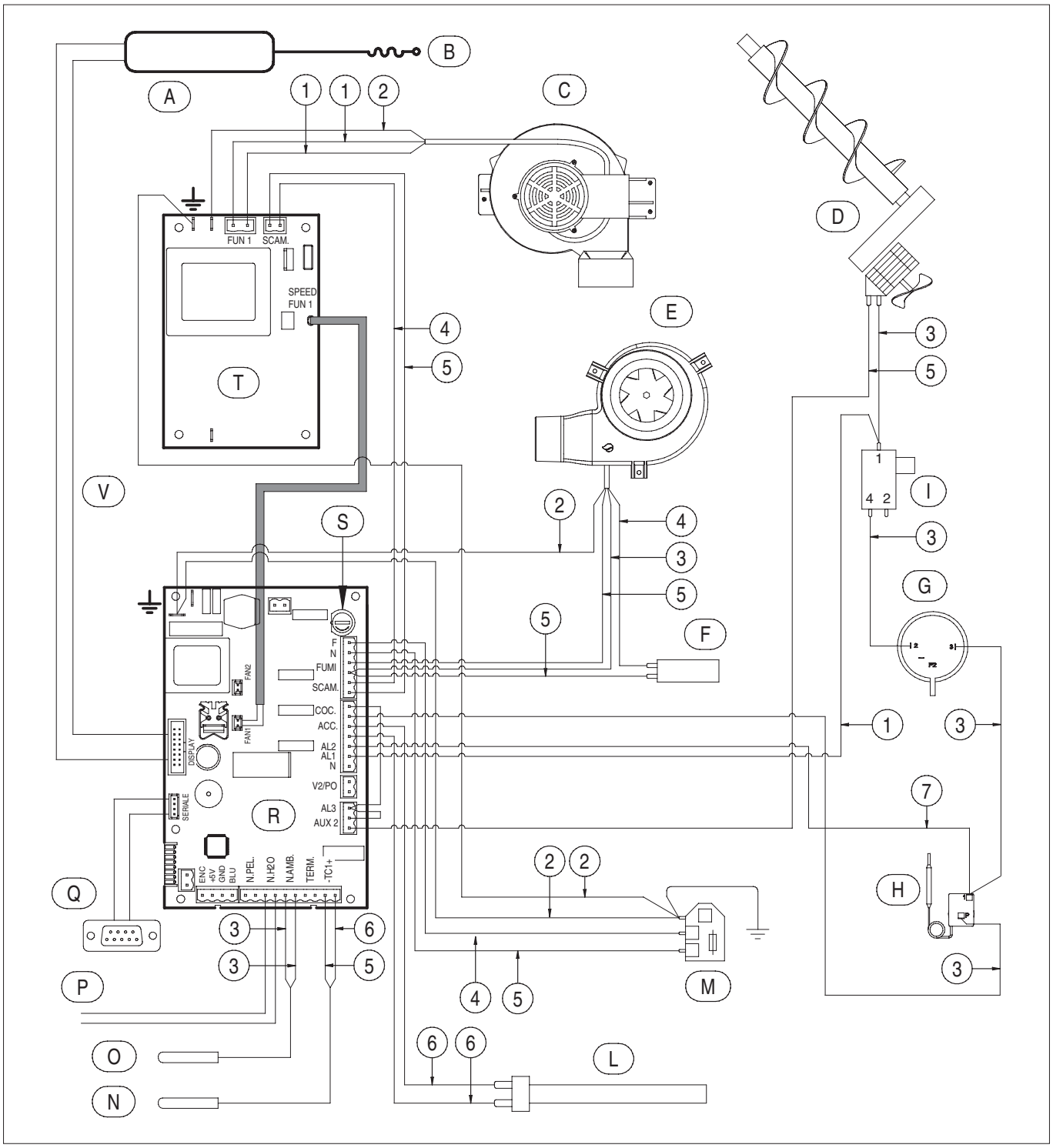


| Pos. | Key to parts | Pos. | Key to parts |
|---|---|---|---|
| A | Emergency display | M | Power supply with fuse (5X20 4AH250V) |
| B | Antenna | N | Smoke sensor |
| C | Room fan | O | Room sensor |
| D | Pellet-loading auger | P | External thermostat connection |
| E | Flue gas fan | Q | Serial port DB9 |
| F | Capacitor | R | Motherboard |
| G | N.O. Pressure switch (normally open) | S | Fuse 5X20 4AL250V |
| H | N.C. 80° thermostat (normally closed) | T | Fan card |
| I | Microswitch | U | - |
| L | Ignition glow plug | V | Flat cable |

| N° | Key to colours |
|---|---|
| 1 | White |
| 2 | Yellow-green |
| 3 | Black |
| 4 | Brown |
| 5 | Blue |
| 6 | Red |
| 7 | Grey |

# 3.0 FUEL

DT2010233-04

The wood pellet is obtained by pressing wood sawdust left over from the working of natural dried wood. The typical small, cylindrical form is obtained by passing the material through a die. Thanks to lignin, a natural element which is released during the pressing of the raw material, the pellets acquire a good consistency and compactness without requiring treatment with additives or caking agents.
There are various types of pellet on the market with qualities and characteristics that vary depending on the processes they have undergone and the type of wood used in their production.

**Since the characteristics and quality of the pellet considerably affect stove performance, efficiency and proper operation, we recommend that you use high-quality pellets.**
**Gruppo Piazzetta S.p.A has tested and programmed its stoves and can ensure best performance and trouble-free operation using pellets with the following specific characteristics:**

| Pellet characteristics | |
|---|---|
| Components | natural pure wood pellet |
| Length, approx. | 10 – 30 mm |
| Diameter, approx. | 6 – 6.5 mm |
| Apparent density, approx. | 650 kg/m$^3$ |
| Specific weight, approx. | > 1.0 kg/dm$^3$ |
| Net heat value, approx. | 5 kWh/kg |
| Moisture content, approx. | <8% |
| Residual ash, approx. | <0.5% |
| N.B.: the above data refer to beech/fir wood pellets | |

**To ensure trouble-free operation:**
**DO NOT** use pellets with dimensions other than those recommended by the manufacturer.
**DO NOT** use poor quality pellets containing sawdust, bark, maize, resins or chemical substances, additives or adhesives.
**DO NOT** use damp pellets.

**Choosing other and unsuitable pellets**
- obstructs the grate and flue gas pipes;
- increases fuel consumption;
- reduces efficiency;
- means that proper stove operation cannot be guaranteed;
- causes dirt to build up on the glass;
- leaves particles which have failed to burn and heavy cinders.

**The presence of moisture in the pellets increases their volume and causes them to split which in turn causes:**
- malfunction of the fuel-loading system;
- inefficient combustion.

**Pellets should be stored in a sheltered, dry place.**
To use good quality pellets with dimensions and heat-producing properties other than those recommended above, it will be necessary to change the stove operating parameters.

⚠ **This "customisation" of stove settings must be carried out at a Gruppo Piazzetta S.p.A. Service Centre or by specially qualified personnel authorised by Gruppo Piazzetta S.p.A.**

⚠ **Using pellets that are out of date or not in conformity with the manufacturer's recommendations not only damages the stove and jeopardises its performance, but can render the guarantee null and void and relieves the manufacturer of all liability.**

Fig. 24


DT2030346-00

# 4.0 PREPARING FOR INSTALLATION

DT2010074-06

To prevent accidents or damage to the product we recommend the following:
- unpacking and installation must be carried out by at least two people;
- every operation involving movement of the product must be carried out with the proper tools in full compliance with current safety regulations;
- the packaged product must be kept in the position according to the directions shown by the diagrams and notices on the pack;
- if ropes, straps or chains are used, ensure that they are able to take the weight of the pack and that they are in good condition;
- use slow continuous movements when moving the pack to avoid jerking the ropes, chains, etc.;
- do not tilt the package excessively to avoid toppling;
- never stand in the vicinity of loading/unloading equipment (forklift trucks, cranes etc).

⚠ **Unpack the product being careful not to damage or scratch it, take the accessories pack and any pieces of polystyrene or cardboard used to wedge moveable parts etc. out of the stove firebox.**
**Keep packaging (plastic bags, polystyrene, etc.) out of reach of children, since it could be a potential source of danger, and dispose of according to local regulations.**

# 5.0 INSTALLATION

DT2012010-00

Pursuant to current regulations on the safety of electrical equipment, you must contact a Piazzetta After-Sales Service Centre or a qualified electrician for all and any work connected with installation, maintenance or servicing that involves access to electrical parts.

**Cladding**

- Having completed assembly of the stove and installed any external room thermostat, proceed with assembly of the stove cladding, referring to the ceramic cladding instruction booklet provided with the stove.

DT2010071-05

English

## 5.1 MULTIFUOCO SYSTEM

DT2010122-05

- Thanks to Piazzetta technology and R&D, this pellet stove offers the advantages of the "**Multifuoco system**", a system EXCLUSIVE and PATENTED by Gruppo Piazzetta S.p.A., a true innovation in the field of pellet stoves.

- The "Multifuoco system" revolutionises all methods of heat circulation currently in use in pellet stoves: the heat produced by the firebox is not only circulated from the lower part of the stove into the room, but hot air can also be ducted via Ø 75 mm hoses to adjoining rooms (Fig. 26).
  This exclusive floor-standing heat distribution system offers notable advantages: even spread of temperatures (Fig. 25).
  The hot air produced is propelled by a fan and distributed via the grille in the bottom front of the stove.

- This grille is fitted with an adjustable flap.
- To direct the outflow of hot air as required, adjust the angle of the flap by pressing on the part of it that projects (Fig. 27).

**Instructions for ducting the hot air**

- The fan kit, which propels hot air into the room, can be fitted with a **Y**-element which effectively allows the hot air flow to be doubled up, directing it via a hose also to the rear of the stove, from where it can then be ducted to adjoining rooms.

- Some examples of possible installation are given below as well as examples of how to duct the hot air in order to heat other rooms.
  Such examples are given purely for demonstration purposes; best efficiency can be obtained using Ø 75 mm coated ducting in accordance with instructions given in the sub-paragraph "**Wall and floor ducting**" and with a maximum total hose length of 16 metres. This length consists of the sum of the single lengths of hoses for each fan.

⚠ **It is of fundamental importance that when ducting heat from the rear of the stove, the outlet vents near the stove or the Y-element must not be closed in order to avoid overheating. In cases where only one rear outlet from the fan is envisaged, the outlet vent must always be kept open.**

- The examples show the ducting. Each diagram gives just one example of the many possible solutions.

Fig. 25

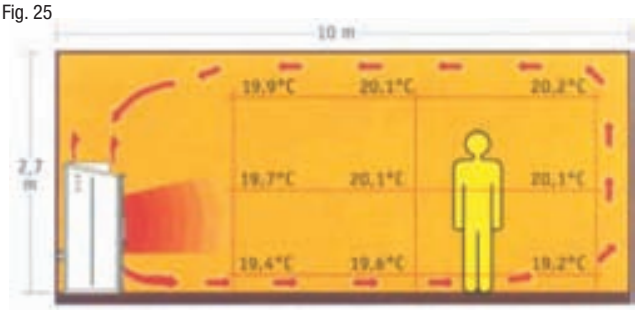


DT2030163-00

Fig. 26

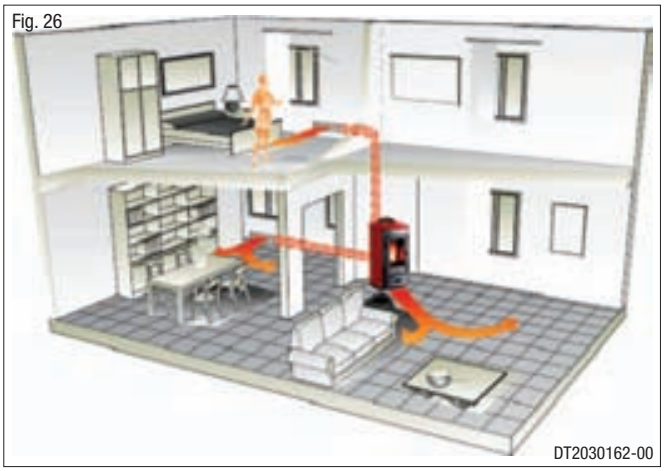

DT2030162-00

Fig. 27

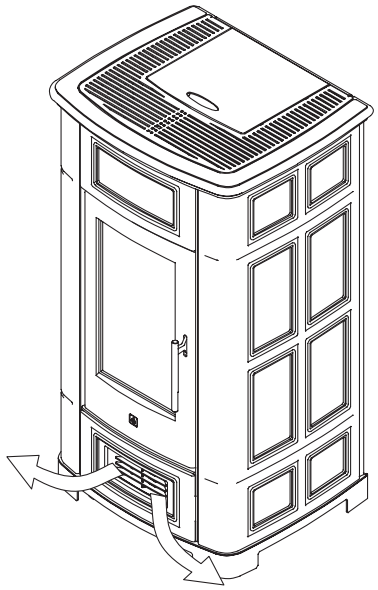

DT2030310-01

***Solution 1 - Fig. 28 - 29:***
*The stove is installed in the room which is to be heated, with the hot air directed to the front only, as when the stove arrives from the factory (Fig. 28). Alternatively the air can flow to the rear by connecting a 7.5 cm-diameter hose to the fan outlet (Fig. 29). In this set-up the stove heats the room where it is installed by radiation only, and heats the adjoining room through the ductwork to the rear.*

⚠ ***For the example shown in fig. 29 it is necessary to use an outlet vent which is permanently open.***

Fig. 28

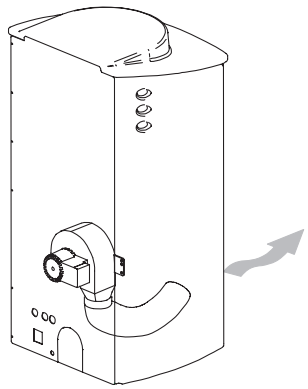

DT2030164-00

Fig. 29

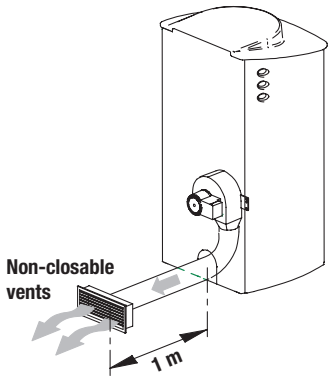


DT2030165-00

***Solution 2 - Fig. 30:***
*The stove is installed in the room to be heated with the hot air ducted to the front and, with the installation of a **Y**-element, also to the rear thereby allowing the heating of a second room. A Ø 7.5 cm hose with a maximum length of 16 metres is connected to the fan outlet (Fig. 30).*

⚠ ***For the example shown in fig. 30 with single duct, the outlet vent must be partially open but never closed to avoid overheating.***

Fig. 30

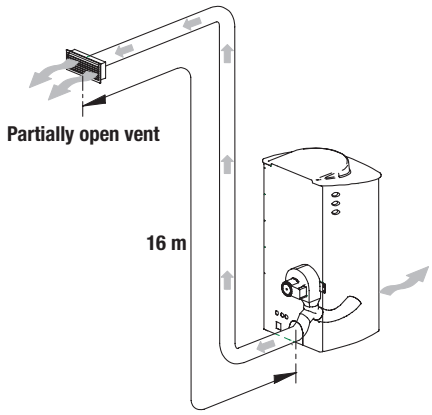


DT2030166-00

***Solution 3 - Fig. 31:***
*Extension of the previous solution, with the stove installed in the room to be heated and the air flow ducted to the front and the rear, but using a second **Y**-element to double the ducting at the rear as shown. Maximum total length of the hoses 16 metres. (Fig. 31).*

⚠ ***For the example shown in fig. 31, for efficient ducting and to avoid overheating, the outlet vent closest to the Y-element must be partially open but never closed to avoid overheating.***

Fig. 31

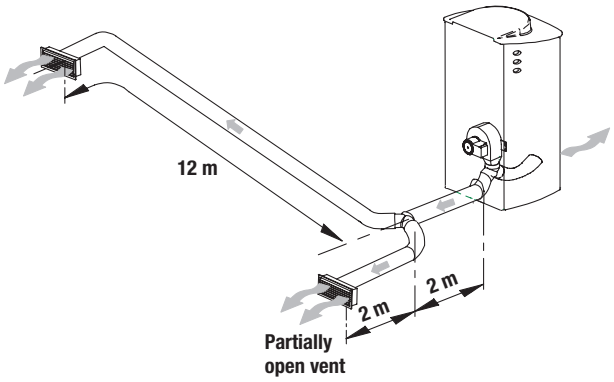


DT2030167-00

English

English

**Wall and floor ducting - Fig. 32 / 35**

For efficient ducted heat distribution:

- lag the hose with a 2 cm thick insulation (e.g. mineral fibre, ceramic fibre, rock fibre) to limit heat loss and to guarantee a sufficiently warm air temperature;
- the insulation must have a specifi c weight equal to or more than 50 kg/m³ with working temperature limit of at least 250°C. Thermal conductivity λ (100°C) ≤ 0,050 W/mK.
- Material with code “AGI Q132” or “DIN 18895” is allowed for thermal insulation;
- the maximum total length of the hose connected to the fan must not exceed 16 metres.

⚠ **If the insulating material is not enclosed under the floor or within the walls, it must be fixed to the surface with suitable fastenings at intervals of 30 cm.**

A few examples of how the hose can be installed in walls or floors are given to the side.

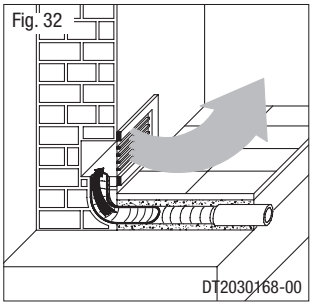


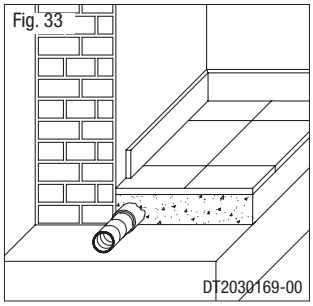


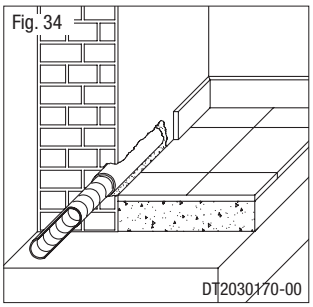


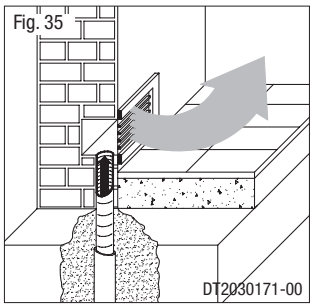


**Hot air outlet vent radiation area (mm) - Fig. 36**

A safety area must be ensured around the hot air outlet vent within which there must be no flammable objects (furniture, carpets, curtains, etc.) or heat sensitive materials (wood, plastic, etc.).

The diagram to the side shows the measurements for this safety area, which includes 600 mm from the upper edge of the vent.

⚠ **If the floor is flammable, the hot air outlet vents must be located at least 200 mm from the floor.**

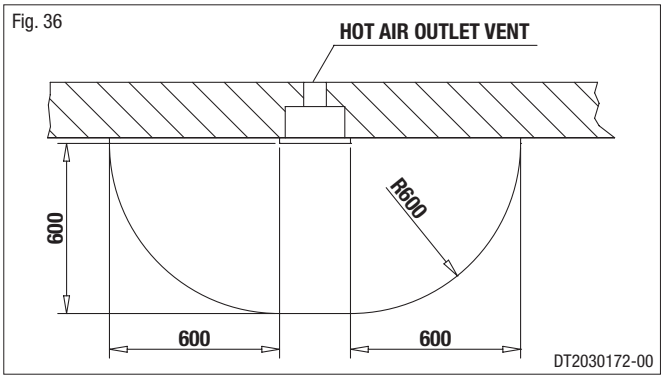

## 5.2 ELECTRICAL CONNECTIONS AND CONTROLS

**Power cable (6)**

- The stove/fireplace comes with a power cable which must be connected to a 230V/50Hz mains socket. Connection to the rear of the stove/fireplace is shown in fig. 39.
- The power rating is indicated in the paragraph "**TECHNICAL DATA**".

⚠ **The appliance must be connected to an efficient earthing/ grounding system.**
**Ensure that in its normal position the power cable does not come into contact with any heated parts.**
**Ensure that the electrical plug is accessible also after installation of the stove.**

**Room sensor connection (5)**

- When installing the stove/fireplace, it is necessary to connect the room sensor (provided) to the correct jack (Fig. 37). The sensor can be positioned as shown in fig. 38, otherwise remove the band, uncoil the lead and then place the sensor in a spot where a more accurate room temperature reading can be obtained.

**Pipe tap (3)**

- The appliance has an external socket for measuring the pressure (vacuum) of the flue gas outlet pipe. This control and verification should be carried out by authorised personnel at the time of installation or during maintenance.

**Connection to the DB9 serial socket (7)**

- The appliance has a DB9 serial socket, which is used to check appliance operation. Controls should be carried out by authorised personnel at the time of installation or during maintenance.
- The optional GPRS kit, if ordered, may be connected to the DB9 serial socket.

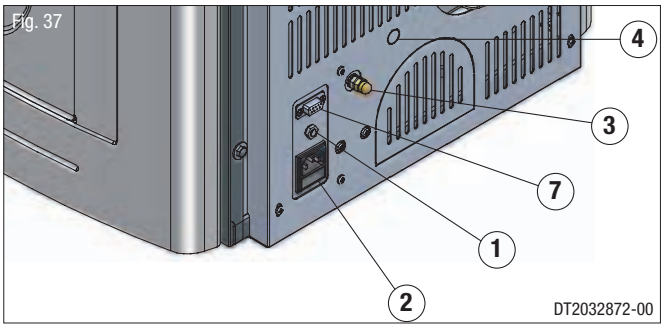


1 External jack for connection of room sensor
2 Socket for power lead
3 Pipe tap
4 Knockout for inserting cable gland PG7 for connection of external thermostat
5 Room sensor connection
6 Power lead connection
7 DB9 serial socket

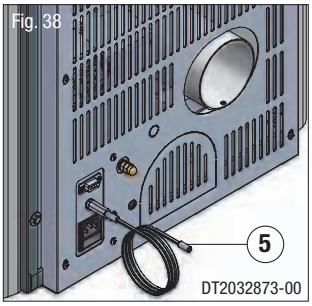


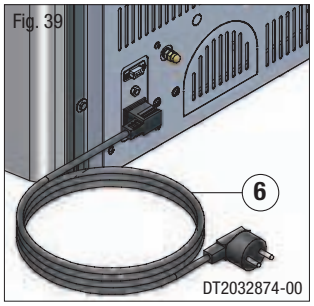


English

## 5.3 INSTALLING THE EXTERNAL THERMOSTAT

DT2010997-02

The appliance is designed for connection to an external room thermostat (not included in the package).
To connect the thermostat use a 2x0.5 mm² cable secured with a PG7 cable gland to be inserted in the relative hole in the rear panel (Fig. 42).
**Only authorised personnel should carry out this operation.**

⚠ **Installation can be carried out with any type of room thermostat but requires a PG7 cable gland similar to that shown in fig. 41. To connect the room thermostat to the electronic board, refer to the wiring diagram.**

Proceed as follows for installation:

- disconnect from the main power supply before opening the appliance;
- remove the protective panel from the electronic board and then remove the rear panel (Fig. 40);
- remove the knockout to be found in the rear panel (position 4 - fig. 37);
- insert the thermostat cable through the PG7 gland and then insert the gland into the hole obtained from removing the knockout in the rear panel (Fig. 42);
- connect the room thermostat cable terminal to the 2-pin terminal of the electronicboard (detail Fig. 40 – see WIRING DIAGRAM);
- refit the rear panel, ensuring that the cable inside the stove cannot come into contact with hot or moving parts;
- refit the protective panel over the electronic board.

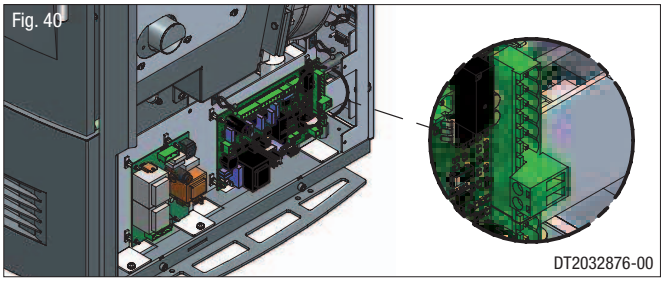


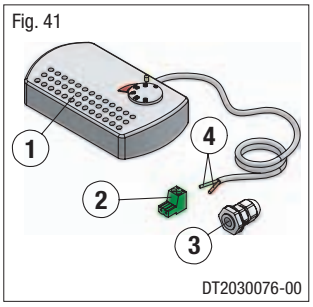


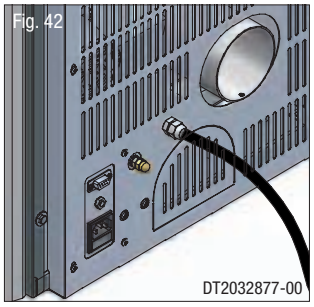


1 Thermostat
2 Electronic board 2-pin terminal
3 Cable gland PG 7
4 Thermostat cable terminal

## 5.4 INSTALLING THE Y-ELEMENT (OPTIONAL)

English

- Ducting of heat to adjoining rooms is at the user's discretion.

- The **Y**-element should be attached to the fan outlet.

- Proceed as follows:

- disconnect from the main power supply before opening the appliance;
- remove the stove rear panel;
- pull out the hose from the fan outlet by loosening the clip which holds it in place;
- shorten the hose (Fig. 44) connected to the stove front outlet by **about five cm**;
- attach a piece of hose 10 cm long onto the **Y**-element, noting the arrow stamped on the Y-element, as shown in figures 45 - 49;

⚠ **Take note of the arrow stamped on the Y-element. The direction of the arrow does not correspond to the actual direction of air outflow.**

- connect the previously removed and shortened hose to the branch of the **Y**-element with the arrow (Fig. 46 - 49);

- fasten the 10 cm piece of hose onto the **Y**-element, at the fan outlet, using the clips provided in the kit (Fig. 47 - 49);

- fit a piece of hose onto the remaining free outlet of the **Y**-element of suitable length to reach the chased duct, and secure with the hose clip provided in the kit (Fig. 48 - 49);

- remove the knockout from the rear panel (Fig. 50);

- refit the rear panel;

- move the stove closer to the wall (Fig. 51) and, using the hose clips provided, fix the hose to the chased duct (Fig. 52);

- place the stove in the desired location, complying with the minimum safety distances (see section **MINIMUM SAFETY DISTANCES**).

Fig. 43


Fig. 44


Fig. 45


Fig. 46


Fig. 47

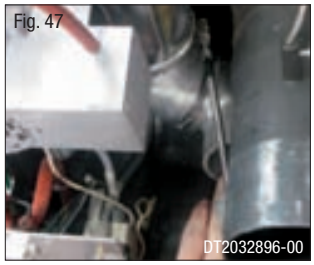


Fig. 48


Fig. 49

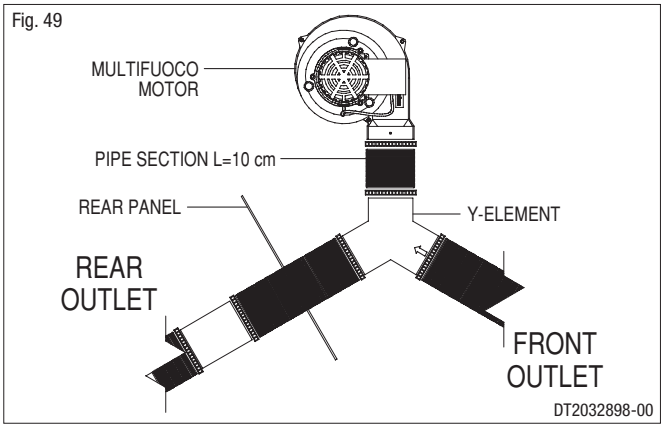


Fig. 50

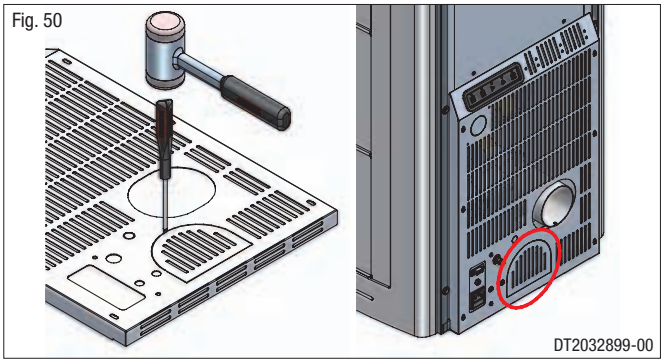


Fig. 51

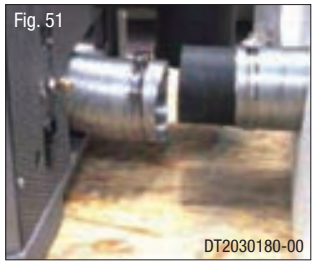


Fig. 52

# 6.0 USE

DT2012188-00

- Do not use the stove as a cooking appliance.
- Ensure that the room in which the stove is installed is sufficiently well ventilated (fresh air intake).
- Ensure that all joints in the flue are hermetically sealed using a silicone- (not cement-) based sealant which is resistant to temperatures of up to 250ºC and which shows no sign of deterioration.
- Check (or have checked) regularly that the flue is clean.
- Under no circumstances use fuels other than pellets.
- Remove any deposits of unused pellets left by failed ignition before restarting the stove.

English

⚠ **During operation some parts of the stove (door, handle, controls, ceramic parts) can reach high temperatures.**
**Take great care and all the necessary precautions, especially in the presence of children, the elderly or disabled and pets.**
**Keep any inflammable object well away from the stove while it is in use (MINIMUM 80 cm from the front panel).**
**While in use the door must remain closed and the glass must be present and intact.**
**The removal of the protective grille inside the pellet hopper is strictly prohibited.**
**If replenishing with pellets while the stove is lit, ensure that the bag does not come into contact with any hot surfaces.**

DT2010035-07

## 6.1 LOADING THE PELLETS

DT2010730-00

- To load the pellets into the hopper it is advisable to tear off the edge of the sack and empty the sack directly into the hopper. This makes filling easier and avoids pouring pellets on top of the stove.

⚠ **Do not allow sawdust to accumulate on the bottom of the hopper.**
**Do leave leftover pellets on top of the stove – they could catch fire!**

Fig. 53


DT2030459-00

Fig. 54


DT2032886-00

## 6.2 REMOTE CONTROL

DT2011836-01

- The pellet stove comes equipped with an LCD-display remote control and radio transmitter which allow you to operate its various functions.

⚠ **The remote's range can be affected by other devices which operate on a continuous radio frequency of 433.92 MHz, for example radio headphones, toys, wireless mouses etc.**
**The remote has a range of around seven metres in conditions where there is no interference from other sources.**

- When pressing the keys to select the various functions wait for a signal from the stove that the selection has registered before selecting further functions. Or if you are in an adjoining room wait for confirmation on the remote's display. If the stove is not receiving signals from the remote try bringing the remote closer to the stove. Below are listed the various functions of the remote control's keys.

Fig. 55

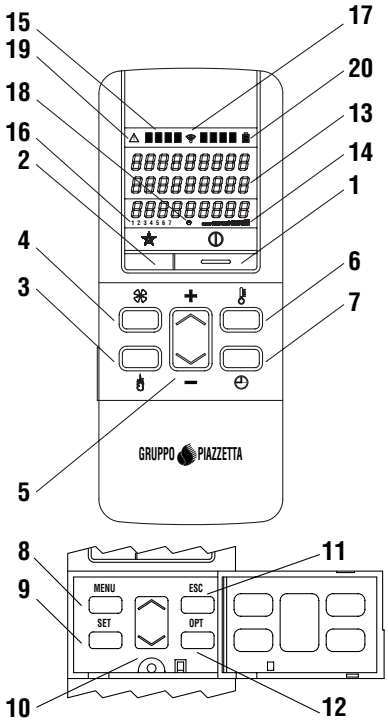


DT2030325-00

| NUMBER | KEY / DISPLAY | DESCRIPTION |
|---|---|---|
| 1 | KEY ON/OFF | Allows you to start up or shut down the stove. |
| 2 | KEY STAND-BY | Pressing the stand-by key and holding it down (for around 5 seconds) until KEYPAD BLOCKED appears on the display will disable the keypad. To re-enable the keypad press the stand-by key and hold it down (for around 8 seconds) until KEYPAD UNBLOCKED appears on the display. |
| 3 | KEY POWER | Allows you to select the power setting. With the SELECT key you can choose between the four available settings, P1-P2-P3-P4. |
| 4 | KEY FAN SPEED | Allows you to choose the speed setting on the Multifuoco fan. With the SELECT key you can choose between the three available settings, 01-02-03. |
| 5 | KEY SELECT | Allows you to choose: • power level - having previously pressed the POWER key • fan speed - having previously pressed the FAN SPEED key • temperature - having previously selected the TEMPERATURE key |
| 6 | KEY TEMPERATURE | Allows you to set the room temperature. The SELECT key will allow to choose the desired temperature between 7°C and 30°C. |
| 7 | KEY TIMER | Displays the current date and time. |
| 8 | KEY MENU | Allows: • access to the programming menu • return to the initial display |
| 9 | KEY SET | Confirm MENU selected |
| 10 | KEY MENU SELECTION | Scrolls through the programming MENU |
| 11 | KEY ESC | Returns to previous menu |
| 12 | KEY OPT | Displays the MULTICOMFORT temperatures. The dash before the temperature shows which sensor is giving the temperature reading. |
| 13 | DISPLAY | Shows on three lines the function settings, the current time and the temperature. |
| 14 | DISPLAY POWER | Shows the power setting selected, P1-P2-P3-P4. |
| 15 | DISPLAY MULTIFUOCO | Shows the Multifuoco setting selected, 01-02-03. |
| 16 | DISPLAY DAYS OF THE WEEK | Shows the day of the week, 1 Monday, 2 Tuesday, 3 Wednesday, 4 Thursday, 5 Friday, 6 Saturday, 7 Sunday. |
| 17 | DISPLAY RADIO SIGNAL EMISSION | Active if the remote is receiving data from the stove |
| 18 | DISPLAY TIMER | Shows that the timer is engaged |
| 19 | DISPLAY SAFETY | Symbol appears when the safety system is activated |
| 20 | DISPLAY FLAT BATTERY | Shows that the battery is flat or running down |

## 6.3 LIGHTING FOR THE FIRST TIME

DT2010082-06

• Before lighting the stove for the first time, check that the grate is properly placed and pushed towards the left.
• There will be odours when lighting the first few times due to the evaporation of paints and oils used during the manufacturing process.

IDuring this stage, air the room well where the stove is installed and avoid staying there any length of time since the fumes being given off could be harmful to persons or pets.
The stove body should have settled down and the paints fully evaporated after having lit the stove a few times.

To this end, follow the instructions given below when using the stove:
- Operate at medium power for the first 5-6 hours after igniting the fuel (the expansion caused by the heat during this stage will allow the stove body to settle).
- After the settling-down stage the stove must be set to operate at maximum power for a period between 6 and 10 hours, depending on the amount of paint on the stove body that must be evaporated off.

The time indicated for operation at maximum power does not necessarily have to be continuous, but may be divided up into two periods separated by an interval of at least 3-4 hours with the stove shut down.
At the end of the recommended period the paint will have evaporated and the stove should be used at the suitable power for normal use.
If necessary the stove may be used for a further period at maximum power to ensure complete and final disappearance of all paint residue.
When the hopper is being loaded for the first time the loading auger needs time to fill up; during this stage the pellets are not distributed inside the firebox and it is highly probable that the first attempt at ignition fails. If the alarm is activated, shut down the stove by pressing the ON/OFF key for a few moments, remove the fuel in the grate and then set the stove for a new ignition process.
Dispose the not burned pellets contained in the brazier.

## 6.4 STARTUP AND NORMAL OPERATION

- Before proceeding with lighting the stove:

⚠ **ensure that the hearth door is well closed.**

- Check that the pellet hopper is full or at least contains enough pellets for the stove to run for the desired period.

- When the stove is connected to the power supply but is not yet lit, the display will show the readout "**OFF**" and in the lower half the current time, the measured temperature and the previously set power and fan settings.

Fig. 56

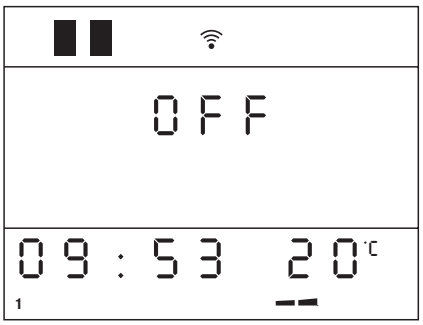


English

| STARTUP | | |
|---|---|---|
| **Action** | **Description** | **Display** |
| **Hold the ON/OFF key down for several seconds** | A cycle starts with three phases which take the stove into the normal operating mode: | |
| | **CONTROL (first 20 seconds)**<br>• The lighter (glow plug) activates. |  |
| | **START PHASE I**<br>• The extractor fan starts up.<br>• The fuel-loading auger is activated and starts to feed pellets into the grate. | 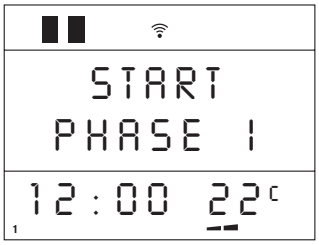 |
| | **START PHASE II**<br>• If the lighter has triggered the combustion process, the fuel-loading auger increases to allow a period of stabilisation and correct combustion of the pellets in the subsequent normal operating mode.<br>• If during the startup phase the sensor on the flue gas outlet shows a rise in temperature (sign that the combustion process is underway), the stove is considered to be lit and goes into the normal operating mode. | 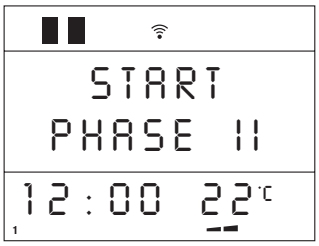 <br>DT2040051-07 |

English

| NORMAL OPERATION | | |
|---|---|---|
| **Action** | **Description** | **Display** |
| | Once the startup cycle has been successfully completed the stove stabilises in the normal operating mode. | |
| | The power, fan speed and room temperature may be adjusted during normal operation.<br>To the side is an example of the INITIAL DISPLAY in normal operation. | LEVEL<br>P2<br>12:00 22°C |
| **Press the POWER key and**<br>**select** | **POWER**<br>To adjust the power, press the **POWER** key and select the desired setting by pressing the SELECT key.<br>After the desired setting has been selected the remote control returns to the INITIAL DISPLAY. | SET<br>POWER<br>P3 |
| **Press the FAN key and**<br>**select** | **FAN SPEED**<br>To adjust the Multifuoco setting, press the **FAN** key and select the desired Multifuoco setting using the SELECT key.<br>After the desired Multifuoco setting has been selected the remote control returns to the INITIAL DISPLAY. | SET<br>VENT-1<br>02 |
| **Press the TEMPERATURE key and**<br>**select** | **ROOM TEMPERATURE**<br>To adjust the temperature setting, press the **TEMPERATURE** key and select the desired temperature using the SELECT key (range 7°C to 30°C). When the desired temperature has been reached the readout **OK** appears in the initial display and the stove operates at minimum power even if the display shows the originally set power level. The temperature can be read by the remote control, by the stove itself or by an external thermostat. To choose whether the remote or the stove will read the temperature, see the section "**MULTICOMFORT**".<br>The readout "**00**" appears in the initial display when using an external thermostat and the readings from the stove and the remote control are cut out. | SET TEMP<br>ROOM<br>26°C |
| | During normal operation the automatic grate cleaning function activates periodically, the frequency varying according to the settings pre-programmed by Gruppo Piazzetta personnel.<br>This procedure removes ash deposits and other buildups, which would otherwise prevent correct stove operation.<br>The readout "**PUL**" appears in STOVE STATUS along with the flue gas temperature. | CLEANING<br>BRAZIER<br>12:00 26°C |

⚠ **Should temperatures rise above an established threshold during normal stove operation at maximum power, the fan motor operates for a few minutes at maximum speed to help disperse the heat and prevent the appliance from possibly overheating.**
**The readout "MAX VENT" appears in STOVE STATUS to indicate this condition.**

DT2040109-00

| SHUTDOWN | | |
|---|---|---|
| **Action** | **Description** | **Display** |
| **Hold the ON/OFF key down for several seconds** | Fuel loading stops, while the cooling fan and the extractor fan continue to operate until the stove has cooled.<br><br>• The readout "**PUL**" appears in STOVE STATUS along with the flue gas temperature.<br>• See the section on programming. | CLEANING<br>BRAZIER<br>12:00 22°C |
| ⚠ **Never unplug the stove from the power supply at this stage as this could cause internal problems and compromise subsequent ignition operations.** DT2040060-05 | | |

| EXTERNAL THERMOSTAT | | |
|---|---|---|
| **Action** | **Description** | **Display** |
| | Stove operation can be regulated by any kind of external room thermostat connected to the electronic board.<br>To connect the thermostat, see "**INSTALLING THE EXTERNAL ROOM THERMOSTAT**". | |
| **Press the TEMPERATURE key and**<br><br>**select** | With the stove powered, irrespective of the operating status, set the stove to the minimum temperature value of 7°C.<br><br>Operation of the external thermostat depends on the stove temperature setting:<br>- if the set stove temperature is less than the room temperature, the external thermostat prevails.<br>- if the set stove temperature is more than the room temperature, the internal stove thermostat prevails. The external thermostat is disabled. | SET TEMP<br>ROOM<br>7°C |
| ⚠ **The room sensor must be connected. If the room sensor is not connected the appliance does not modulate the power and operates to user settings.** DT2040059-07 | | |

English

## 6.5 TROUBLESHOOTING

English

A list of situations that could occur and instructions on what to do is given below.

| FAILED IGNITION | |
|---|---|
| **Description** | **Display** |
| The stove is in the startup phase, the readout "**NO LIT**" appears on the display and the warning buzzer sounds (if set).<br>The stove does not light because the flue gas outlet sensor does not detect an increase in temperature (sign that the combustion process has not been triggered) or because there is no pellet feed.<br>If the stove is new or has gone out having fully burned the pellets in the grate, even though the hopper is full, it may be that in the ignition phase the pellets are not being fed into the firebox due to the auger not yet having been fully loaded. | NO<br>LIT |
| Shut the stove down by pressing the ON/OFF key down for a few seconds.<br>The warning buzzer stops.<br>The readout **CLEANING BRAZIER** appears on the display and when the stove has cooled the readout **OFF** appears.<br>**Empty the grate completely** and set a new ignition cycle (see the table LOAD AUGER in the section PARAMETERS MENU).<br>Repeat the ignition process as described above. | CLEANING<br>BRAZIER<br>12:00 22°C |
| ⚠ **Do not empty the contents of the grate into the hopper because there may be unburnt pellets present.**<br><br>⚠ **If the stove occasionally fails to ignite it could be caused by:**<br>**- pellet composition or size not in compliance with the specifications given in this booklet (see the "FUEL" section);**<br>**- insufficient mains voltage.**<br><br>**In the above cases any call-out of the service centre is not covered by the warranty, since the problem is not due to a defect in the product.** DT2012310-00 | |

| SWITCHING OFF DURING THE START PHASE | |
|---|---|
| **Description** | **Display** |
| The stove is in the START PHASE I and is turned off by the user pressing the ON/OFF key.<br>The readout "**EMPTY BRAZIER**" appears on the display. | EMPTY<br>BRAZIER |
| **Empty the grate completely** before setting a new ignition cycle.<br>Keep the ON/OFF key pressed down to make the readout disappear and return to the initial display. | |
| ⚠ **Do not empty the contents of the grate into the hopper because there may be unburnt pellets present.** DT2012311-00 | |

| RESTARTING DURING THE SHUTDOWN PHASE | |
|---|---|
| **Description** | **Display** |
| **SITUATION 1**<br>The stove is in the shutdown phase and the readout CLEANING BRAZIER is on the display.<br>The stove is restarted by the user pressing the ON/OFF key.<br>The readout "**WAIT COOLING**" appears on the display.<br>This means that you must wait for the necessary cooling times.<br>When the stove has cooled down sufficiently, the new ignition cycle will restart automatically from the control phase. | 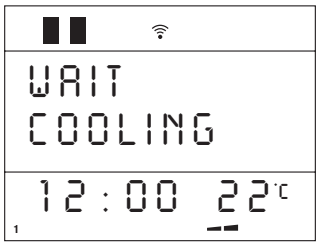 |
| **SITUATION 2**<br>The stove is in the shutdown phase and the OFF status has just appeared on the display.<br>The stove is restarted by the user pressing the ON/OFF key.<br>The readout "**STAND-BY OFF**" appears on the display.<br>This means that the stove is still warm and you must wait for the necessary cooling times.<br>When the stove has cooled down sufficiently, the new ignition cycle will restart automatically from the control phase. | 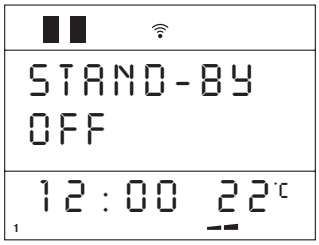 <br>DT2012312-00 |

| INTERRUPTION OF POWER SUPPLY | |
|---|---|
| **Description** | **Display** |
| If there is a blackout while the stove is in operation, there are two possibilities of procedure according to stove set-up:<br>- **blackout without timer thermostat settings;**<br>- **blackout with timer thermostat settings.** | |
| **Blackout without timer thermostat settings.**<br>When the electricity supply is restored, the appliance restarts automatically.<br>• The grate cleaning phase activates.<br>• The fan operates at full speed to allow the stove to cool.<br>• The automatic stove restart cycle starts (the steps detailed in the '**STARTUP**' phase are repeated automatically).<br>• Once the ignition cycle has been completed the stove operates normally at power level 2 with Multifuoco on 2.<br><br>**Blackout with timer thermostat settings.**<br>There are 3 possible situations.<br>- Blackout straddling the time set for ignition: the stove does not restart.<br>- Blackout straddling the time set for shutdown: the stove restarts when the electricity supply is restored.<br>- Blackout within the programmed operating time band: the stove restarts when the electricity supply is restored.<br>Restarting is carried out with the same procedure as listed in "**Blackout without timer thermostat settings**". |  <br>DT2040061-05 |

| EMERGENCY LIGHTING OF STOVE | |
|---|---|
| **Description** | **Display** |
| If the glow plug is not working, the stove may be lit manually as follows:<br>- pour a small quantity of pellets into the grate;<br>- use a lit piece of solid firelighter (not liquid) to ignite the pellets;<br>- close the door;<br>- start the stove using the ON/OFF button. | |
| ⚠ **This procedure is only to be carried out in an emergency while waiting for the servicing technician to arrive.** | DT2040098-00 |

English

## 6.6 CONTROL PANEL

The stove is fitted with a digital control panel to operate stove functions when the LCD remote control is unavailable. The various functions of the control panel are listed below.

Fig. 57

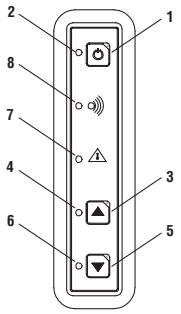


DT2030332-00

| NUMBER | KEY / DISPLAY | DESCRIPTION |
|---|---|---|
| 1 | Key ON/OFF | Allows you to start up or shut down the product manually. |
| 2 | ON/OFF Led | If the LED lights up, it indicates that the stove is lit. |
| 3 | Key INCREASE POWER | Allows you to increase the power setting. You can choose between the two available settings, P1-P3. The Multifuoco fan has a default setting for each of the two power settings. |
| 4 | INCREASE POWER Led | The LED lights up when the power-increase key is pressed and indicates that the power has been increased. |
| 5 | Key DECREASE POWER | Allows you to decrease the power setting. You can choose between the two available settings, P1-P3. The Multifuoco fan has a default setting for each of the two power settings. |
| 6 | DECREASE POWER Led | The LED lights up when the power-decrease key is pressed and indicates that the power has been decreased. |
| 7 | SAFETY DEVICE Led | If the LED lights up, it indicates that a safety device has activated. After approx. 60 seconds the alarm signal will sound (if activated). In the event of activation proceed as follows:<br>- turn off the stove by pressing the ON/OFF key for several seconds;<br>- the alarm signal will stop;<br>- wait until you are sure that combustion of any pellets left in the grate has ceased;<br>- wait for the stove to cool, then check for and remove whatever has activated the safety device. Finally, after having cleaned the grate, restart the stove by pressing the ON/OFF key. |
| 8 | RADIO SIGNAL EMISSION Led | The led lights up when the stove receives data from the remote control. |

## 6.7 SETTING THE LANGUAGE

DT2010469-04

This function allows one of the languages available to be set on the display according to the country where the product is installed.

| HOW TO SET THE LANGUAGE | | |
|---|---|---|
| **Function** | **Action** | **Display** |
| **Selecting the language menu** | Press the MENU button, use the MENU SELECTION button to select the language selection menu and the SET button to confirm. | SELECT LANGUAGE |
| **Selecting the language** | Scroll with the MENU SELECTION button to find the required language (e.g. ENGLISH LANGUAGE) and confirm with the SET button. | LANGUAGE ENGLISH |
| | After confirmation the readout ENABLED FUNCTION appears on the display, which then automatically returns to the initial readout. | FUNCTION ENABLED |

## 6.8 PROGRAMMING

The remote control can be used to select the following functions from the main **MENU**:

**Remote control**

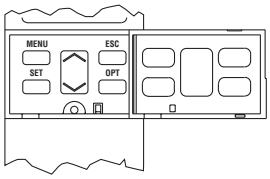


MENU

- SELECT LANGUAGE — SET
  - LANGUAGE ITALIANO
  - LANGUAGE PORTUGUES
  - LANGUAGE FRANCAIS
  - LANGUAGE ENGLISH
  - LANGUAGE ESPANOL
  - LANGUAGE NEDERLAND
  - LANGUAGE DEUTSCH
- SET CLOCK — SET
  - DAY MONDAY
  - DAY TUESDAY
  - DAY WEDNESDAY
  - DAY THURSDAY
  - DAY FRIDAY
  - DAY SATURDAY
  - DAY SUNDAY
- SET CHRONO — SET
  - PROGRAM DAY
  - PROGRAM WEEK
  - PROGRAM WEEK-END
- MULTICOMFORT — SET
  - SELECT RRC
  - SELECT STOVE
- ENERGY SAVING — SET
  - START
  - STOP
- MENU PARAMETER — SET
  - SETTINGS FACTORY > key access
  - DATA BANK > key access
  - SETTINGS LOAD > key access
  - SETTINGS SMOKE EXT > key access
  - MULTIFUOCO V1 > key access
  - RESET PARTHOUR > key access
  - RESET ALARM > key access
  - LOADING AUGER
  - MEMORY COUNTERS — SET
    - HOURS TOTAL
    - HOURS PARTIAL
    - NUMBER START
    - “LAST 5 ALARMS”
- ENABLE BEEP — SET
  - MODE BEEP - ON ÷ OFF
- STATE STOVE
- ESC

These functions are activated by opening the front flap and pressing the following keys:
- the MENU key is used to access the main menu and return to the initial display at any time during programming to alter data that has been input incorrectly;
- the MENU SELECT key is used to scroll through the main menu and the submenus;
- the SET key is used to confirm a MENU or a selection;
- the ESC is used to return to the previous menu display at any time during programming to alter data that has been input incorrectly.

• Whenever the keypad is not used for about 3 ½ minutes, the display goes dark to reduce consumption.
• In a blackout and therefore with no reception by the stove, the display goes dark after about 20 seconds.

English

## 6.9 PROGRAMMING THE CLOCK

English

The stove leaves the factory with the clock already set. All that needs to be done, therefore, is to check that the time is precise or if any change is needed because of summer time.
Correct time setting is necessary to be able to use all the functions where time is involved.
Setting the clock entails programming the following values: day, hour and minutes.
These values are displayed in sequence upon pressing the SELECTOR key.

| SET CLOCK (current day/time) | | |
|---|---|---|
| **Function** | **Action** | **Display** |
| **Set the day** | Press the MENU key, select the SET CLOCK menu using the SELECT MENU key, then confirm by pressing the SET key. | SET<br>CLOCK |
| **Confirm setting and move to next section** | Press the SELECT MENU key and set the “day”.<br>Confirm by pressing the SET key. | DAY<br>MONDAY |
| **Set the hour** | Press the SELECT MENU key and set the current “hour”. Confirm by pressing the SET key. | HOURS<br>CLOCK<br>12: |
| **Set the minutes** | Press the SELECT MENU key and set the “minutes”. Confirm by pressing the SET key. After confirmation the initial display will reappear. | MINUTES<br>CLOCK<br>:01 |

DT2040064-03

## 6.10 TIMER

The timer allows the user to programme the stove to start up and shut down automatically without any manual intervention.
Daily, weekly and weekend programmes can be selected with a maximum of two operating cycles in two separate timetable bands.

*For example:* *Cycle 1: from 6am until 9am.*
*Cycle 2: from 8.30pm until 11pm.*

- In the DAILY programme the two timetable bands once established can be activated or deactivated for all the days of the week.

  *For example:* *if you want the stove to operate from 6am to 9am every day*

- In the WEEKLY programme the two timetable bands once established can be activated or deactivated for each day.

  *For example:* *if you want the stove to operate from 6am to 9am on Monday, Tuesday, but not on Wednesday, and so on.*

- In the WEEKEND programme the two timetable bands once established can be activated or deactivated for Friday, Saturday and Sunday.

  *For example:* *if you want the stove to operate from 6am to 9am on Friday, Saturday, but not on Sunday.*

This kind of timer allows you to have three programmes (DAILY, WEEKLY and WEEKEND) stored permanently. The programmes can be activated or deactivated using the SET TIMER menu. It is advisable to have only one programme active at a time to avoid overlapping.

⚠ **WHEN USING THE TIMER FOR THE FIRST TIME, SET THE CLOCK WITH THE CURRENT DAY, HOUR AND MINUTES, as with a new watch. To set the actual time, see the table SETTING THE CLOCK. This setting will only be necessary the first time of activating the clock.**

| DAY PROGRAMME - 1st operating cycle | | |
|---|---|---|
| **Function** | **Action** | **Display** |
| **Select SET CHRONO menu** | Press the MENU key. Using the SELECT MENU key select the SET CHRONO menu and confirm by pressing the SET key. | SET CHRONO |
| **Select day programme** | Using the SELECT MENU key select the day-programme “PROGRAM DAY” menu and confirm by pressing the SET key. | PROGRAM DAY |
| **Enable or disable day programme** | Press the SELECT MENU key and select **ON** to enable the day programme or **OFF** to disable the day programme. Confirm by pressing the SET key. If you have disabled the programme by selecting **OFF** and do not wish to carry out further programming, press the ESC (EXIT) key to return to the previous menu or the MENU key to return to the initial display. | ENABLE DAY<br>OFF |
| **Set startup time for 1st operating cycle** | Press SELECT MENU to set the startup time, advancing in ten-minute jumps (for example, you want the stove to start up at 06:00). Confirm by pressing the SET key. | START D<br>PROGRAM 1<br>06:00 |

| Function | Action | Display |
|---|---|---|
| **Set shutdown time for 1st operating cycle** | Press SELECT MENU to set the shutdown time, advancing in ten-minute jumps (for example, you want the stove to shut down at 09:00). Confirm by pressing the SET key. | STOP 0<br>PROGRAM 1<br>09:00 |
| | In this stage a shutdown time need not be set. Press SELECT MENU, set the readout "**OFF**" and confirm by pressing the SET key. | STOP 0<br>PROGRAM 1<br>OFF |
| **Set desired power for first operating cycle** | Press SELECT MENU to set the desired power (for example you want power setting 1). Confirm by pressing the SET key. | SET 0<br>POWER 1<br>01 |
| **Set room temperature for first operating cycle** | Press SELECT MENU to set the desired room temperature (for example, you want a room temperature of 25°C). Confirm by pressing the SET key. When the desired temperature has been reached the stove automatically reverts to power setting P1 and the temperature can be read on the remote or on the stove - see Multicomfort menu. | SET TEMP<br>ROOM 1<br>25°C |
| **Set desired Multifuoco fan speed for first operating cycle** | Press SELECT MENU to set the desired fan speed (for example, you want fan speed setting 1). Confirm by pressing the SET key. | SET 0<br>VENT-1<br>01 |
| **After having programmed the first operating cycle you may, if you wish, proceed with programming the second operating cycle by going through the settings in the order as described above. The number 2 appears on the display to indicate the second operating cycle.** | | START 0<br>PROGRAM 2<br>20:30<br>DT2040067-03 |

| WEEK PROGRAMME | | |
|---|---|---|
| **Function** | **Action** | **Display** |
| **Select set chrono menu** | Press the MENU key. Using the SELECT MENU key select the SET CHRONO menu and confirm by pressing the SET key. | SET<br>CHRONO |
| **Select week programme** | Using the SELECT MENU key select the week-programme “PROGRAM WEEK” menu and confirm by pressing the SET key. | PROGRAM<br>WEEK |
| **Enable or disable the week programme** | Press the SELECT MENU key and select **ON** to enable the week programme or **OFF** to disable the week programme. Confirm by pressing the SET key. If you have disabled the programme by selecting **OFF** and do not wish to carry out further programming, press the ESC (EXIT) key to return to the previous menu or the MENU key to return to the initial display. | ENABLE<br>WEEK<br>OFF |
| **Set startup time for 1st operating cycle** | Press SELECT MENU to set the startup time, advancing in ten-minute jumps (for example, you want the stove to start up at 06:00). Confirm by pressing the SET key. | START W<br>PROGRAM 1<br>06:00 |
| **Set shutdown time for 1st operating cycle** | Press SELECT MENU to set the shutdown time, advancing in ten-minute jumps (for example, you want the stove to shut down at 09:00). Confirm by pressing the SET key. | STOP W<br>PROGRAM 1<br>09:00 |
| | In this stage a shutdown time need not be set. Press SELECT MENU, set the readout **OFF** and confirm by pressing the SET key. | STOP W<br>PROGRAM 1<br>OFF |
| **Activate or deactivate the first operating cycle on individual days of the week** | Press the top part of the SELECT MENU key to select the day of the week, then press the bottom part of the SELECT MENU key to select **ON** to activate the first operating cycle on the chosen day or **OFF** to deactivate the first operating cycle on the chosen day. Active days will be shown on the DAYS OF THE WEEK display by the digits 1 MO - 2 Tu - 3 WE - 4 TH - 5 Fr - 6 SA - 7 Su. Confirm by pressing the SET key. | DAYS W<br>LIT 1<br>SU ON |

English

| Function | Action | Display |
|---|---|---|
| **Set desired power for first operating cycle** | Press SELECT MENU to set the desired power (for example you want power setting 1). Confirm by pressing the SET key. | SET W<br>POWER 1<br>01 |
| **Set room temperature for first operating cycle** | Press SELECT MENU to set the desired room temperature (for example, you want a room temperature of 25°C). Confirm by pressing the SET key. When the desired temperature has been reached the stove automatically reverts to power setting P1 and the temperature can be read on the remote or on the stove - see Multicomfort menu. | SET TEMP<br>ROOM<br>25°C |
| **Set desired Multifuoco fan speed for first operating cycle** | Press SELECT MENU to set the desired fan speed (for example, you want fan speed setting 1). Confirm by pressing the SET key. | SET W<br>VENT-1<br>01 |
| **After having programmed the first operating cycle you may, if you wish, proceed with programming the second operating cycle by going through the settings in the order as described above. The number 2 appears on the display to indicate the second operating cycle.** | | SET W<br>PROGRAM 2<br>20:30<br>DT2040068-04 |

| WEEKEND PROGRAMME | | |
|---|---|---|
| **Function** | **Action** | **Display** |
| **Select set chrono menu** | Press the MENU key. Using the SELECT MENU key select the SET CHRONO menu and confirm by pressing the SET key. | SET<br>CHRONO |
| **Select weekend-programme** | Using the SELECT MENU key select the “PROGRAM WEEK-END” weekend-programme menu and confirm by pressing the SET key. | PROGRAM<br>WEEK-END |
| **Enable or disable weekend programme** | Press the SELECT MENU key and select **ON** to enable the weekend programme or **OFF** to disable the weekend programme. Confirm by pressing the SET key. If you have disabled the programme by selecting **OFF** and do not wish to carry out further programming, press the ESC key to return to the previous menu or the MENU key to return to the initial display. | ENABLE<br>WEEK END<br>OFF |
| **Set startup time for 1st operating cycle** | Press SELECT MENU to set the startup time, advancing in ten-minute jumps (for example, you want to stove to start up at 06:00). Confirm by pressing the SET key. | START WE<br>PROGRAM 1<br>06:00 |
| **Set shutdown time for 1st operating cycle** | Press SELECT MENU to set the shutdown time, advancing in ten-minute jumps (for example, you want to stove to shut down at 09:00). Confirm by pressing the SET key. | STOP WE<br>PROGRAM 1<br>09:00 |
| | In this stage a shutdown time need not be set. Press SELECT MENU, set the readout **OFF** and confirm by pressing the SET key. | STOP WE<br>PROGRAM 1<br>OFF |
| **Activate or deactivate the first operating cycle on Friday, Saturday and Sunday** | Press the top part of the SELECT MENU key to select the day of the week, then press the bottom part of the SELECT MENU key to select **ON** to activate the first operating cycle on the chosen day or **OFF** to deactivate the first operating cycle on the chosen day. Do this for Friday, Saturday and Sunday (active days will be shown on the DAYS OF THE WEEK display) and confirm by pressing the SET key. | DAYS WE<br>LIT 1<br>SU ON |

English

| Function | Action | Display |
|---|---|---|
| **Set desired power for first operating cycle** | Press SELECT MENU to set the desired power (for example you want power setting 1). Confirm by pressing the SET key. | 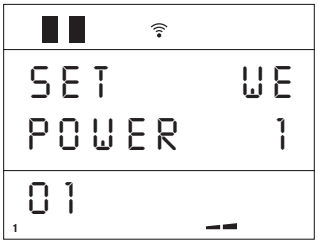 |
| **Set room temperature for first operating cycle** | Press SELECT MENU to set the desired room temperature (for example, you want a room temperature of 25°C). Confirm by pressing the SET key. When the desired temperature has been reached the stove automatically reverts to power setting P1 and the temperature can be read on the remote or on the stove - see Multicomfort menu. | 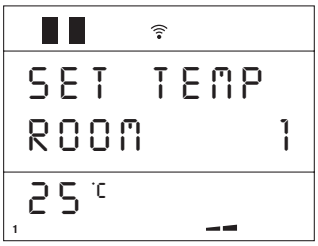 |
| **Set desired Multifuoco fan speed for first operating cycle** | Press SELECT MENU to set the desired fan speed (for example, you want fan speed setting 1). Confirm by pressing the SET key. |  |
| **After having programmed the first operating cycle you may, if you wish, proceed with programming the second operating cycle by going through the settings in the order as described above. The number 2 appears on the display to indicate the second operating cycle.** | |  <br>DT2040073-03 |

## 6.11 MULTICOMFORT

The pellet stove is fitted with the Multicomfort function. This works in conjunction with the Multifuoco ventilation system to improve heat distribution. It allows the room temperature to be read from the stove or from the remote control, so that the Multifuoco settings can be varied according to the requirements of the rooms to be heated.
If the airflow from your stove has been ducted to other rooms you may read the temperature in the room where the stove is installed or in the room where the remote control is situated.

*Example: your stove is installed in a small room and you are ducting the heat only from the rear of the stove (see solution 1 under the paragraph "MULTIFUOCO SYSTEM"). You can position the remote control in the room to where the hot air has been ducted and set the required temperature from this room. To carry out the necessary settings see the MULTICOMFORT menu.*



| MULTICOMFORT | | |
|---|---|---|
| **This function is used to choose the sensor for reading the room temperature: from the stove or from the remote control. To make the most of the Multifuoco fan functions read the sections MULTIFUOCO SYSTEM and MULTICOMFORT OPERATION.** | | |
| **Function** | **Action** | **Display** |
| **Select the MULTICOMFORT menu** | Press the MENU key, then using the SELECT MENU key select the MULTICOMFORT menu.<br>Confirm by pressing the SET key. | 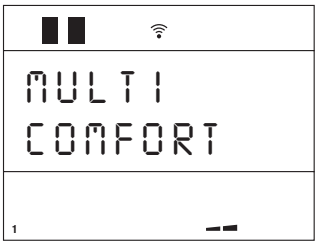 |
| **Select the REMOTE CONTROL SENSOR (SELECT RRC) or STOVE SENSOR (SELECT STOVE)** | Press the SELECT MENU key and select "SELECT RRC" to read the room temperature from the remote control or "SELECT STOVE" to read the room temperature from the stove. Confirm by pressing the SET key. After confirmation the readout FUNCTION ENABLED will appear on the display and the remote control will automatically return to the initial display. |  <br>  |
| ⚠ **If the MULTICOMFORT function is set on the remote control and for some reason there is no communication between the remote control and the stove, after approx. 2 minutes the reference sensor will automatically change to become the sensor installed on the stove. It should be borne in mind that if the stove status was OK (power 1) as a result of the temperature reading of the remote control, it may not be OK according to the temperature reading from the actual stove, which will consequently go to the power level set by the user. In all cases of lack of communication between the remote control and the stove, the emergency display is used.** DT2040106-00 | | |

## 6.12 ENERGY SAVING

DT2012019-00

When the ENERGY SAVING mode is enabled, automatic startup/ignition and shutdown of the stove is activated at temperature values set by the user through the STOP and START functions.
Values from 1 to 3 and the OFF option may be set for each STOP and START function.
The value set from 1 to 3, added to (STOP) or taken away from (START) the programmed room temperature, defines a new temperature at which the STOP and START function will activate.

The operating principle is as follows:
when the room temperature measured by the room sensor, the remote control or the external thermostat reaches the temperature value programmed

by the user, the stove automatically goes to power level 1 (readout “OK” on the display).

If the room temperature continues to rise with operation at power level 1 up to the value set on the STOP function (*e.g. + 2°C compared to the programmed temperature*), the stove shuts down and goes into the stand-by mode.
When the room temperature measured by the room sensor, the remote control or the external thermostat drops to the temperature value set by the user on the START function (*e.g. - 3°C compared to the programmed temperature*), the stoves starts a new ignition phase and goes back to the power level previously set by the user.

⚠ **The stove only restarts when the temperatures measured on the actual stove allow its use in all safety.**

English

If the STOP and OFF functions are enabled, upon reaching the programmed room temperature, the stove will operate in the conventional way by going to power level 1 without shutting down.
Likewise with the START and OFF enabled the stove does not start the startup/ignition phase after automatic shutdown and will remain off.

| ENERGY SAVING | | |
|---|---|---|
| **Function** | **Action** | **Display** |
| **Select the ENERGY SAVING menu** | Press the MENU key, then using the SELECT MENU key select the **ENERGY SAVING** function and confirm by pressing the SET key. | ENERGY<br>SAVING |
| **Select the value to be set for shutdown temperature** | Press the SELECT MENU key and then select the temperature set point between 1 and 3 or disable the function by selecting OFF.<br><br>Confirm by pressing the SET key. | STOP<br>1 °C |
| **Select the value to be set for ignition temperature** | Press the SELECT MENU key and then select the temperature set point between 1 and 3 or disable the function by selecting OFF.<br><br>Confirm by pressing the SET key. | START<br>OFF |
| | After confirmation using the SET key, the readout FUNTION ENABLED is displayed and the readout **ENS** (ENERGY SAVING) appears on the main display. | LEVEL<br>ENS P2<br>12:00 22°C |
| | Upon reaching the temperature set in the STOP function, the stove starts the shutdown stage.<br><br>The readout **ENERGY SAVING OK** appears on the display. | ENERGY<br>SAVING OK<br>12:00 22°C |

DT2040104-00

## 6.13 PARAMETER MENU

The User can only interact with the **LOADING AUGER** and **MEMORY COUNTERS** in the parameter menu, as described in the table below: the other parameters can only be used by an authorised service centre.

| LOADING AUGER | | |
|---|---|---|
| ⚠ **When the stove is new or the pellets have been completely used up, prior to startup and ignition, carry out the LOADING AUGER function.**<br>**This function allows the auger to be loaded and in so doing helps ignition, because pellets will be immediately put into the grate.**<br>**The LOADING AUGER function is only possible when the stove is set to OFF.** | | |
| **Function** | **Action** | **Display** |
| **Select parameters menu** | Press the MENU key, use the SELECT MENU key to select the **PARAMETER MENU** and confirm by pressing the SET key. | MENU<br>PARAMETER |
| **Select loading auger** | Press the SELECT MENU key and scroll the menu until the readout **LOADING AUGER** appears.<br><br>Confirm by pressing the SET key. | LOADING<br>AUGER |
| | The readout **WAITING** appears on the display during loading. | WAITING<br>12:00 22°C |
| | After a set time the auger will be filled and the readout **AUGER LOADED** appears. | AUGER<br>LOADED<br><br>DT2040101-00 |

English

English

| HOUR COUNTER MEMORY | | |
|---|---|---|
| **Function** | **Action** | **Display** |
| **Selection of parameter menu** | Press the MENU key. Using the SELECT MENU key select the MENU PARAMETER menu and confirm by pressing the SET key. | MENU<br>PARAMETER |
| **Selection of hour counter memory** | Press the SELECT MENU key and scroll through the menu until the readout MEMORY COUNTERS appears.<br><br>Confirm by pressing the SET key. | MEMORY<br>COUNTERS |
| **Selection of total hours** | The readout HOURS TOTAL appears in the central part of the display and the total hours of operation on the bottom line.<br><br>Press the SELECT MENU key. | HOURS<br>TOTAL<br>00000 |
| **Selection of partial hours** | The readout HOURS PARTIAL appears in the central part of the display and the number of partial hours of operation on the bottom line.<br><br>Press the SELECT MENU key. | HOURS<br>PARTIAL<br>00000 |
| **Selection of number of starts** | The readout NUMBER START appears in the central part of the display and the number of ignitions on the bottom line.<br><br>Press the SELECT MENU key. | NUMBER<br>START<br>00000 |
| **Selection of last 5 alarms** | The last 5 alarms (e.g. NO LIT, SAFETY THERMAL, SAFETY SMOKE, ….) appear in the central part of the display and the order in which the alarms occurred on the bottom line.<br><br>Press the ESC key to return to the initial display. | NO<br>LIT<br>MEM-AL-1 |

DT2040100-00

## 6.14 ENABLE BEEP (AUDIO SIGNAL)

DT2040065-03

This function allows you to engage or disengage the alarm signal emitted by the stove to indicate that it has received the remote control's commands.

| ENABLE BEEP (audio signal) | | |
|---|---|---|
| **Function** | **Action** | **Display** |
| **Select enable beep menu** | Press the MENU key. Using the SELECT MENU key select the "**ENABLE BEEP**" menu and confirm by pressing the SET key. | ENABLE BEEP |
| **Select enable or disable beep** | Press the SELECT MENU key and select "**ON**" to enable the buzzer or "**OFF**" to disable it. Confirm by pressing the SET key. After confirmation the readout "**BUZZER ENABLES**" will appear on the display while the initial display will automatically reappear on the remote control. | MODE BEEP<br>ON<br>DT2040065-03 |

## 6.15 STOVE STATUS

DT2012057-00

This function displays the stove status under the various operating conditions.

| STOVE STATUS | | |
|---|---|---|
| **Function** | **Action** | **Display** |
| **Select stove status menu** | Press the MENU key, then using the SELECT MENU key select the stove status "STATE STOVE" menu.<br><br>Confirm by pressing the SET key. | STATE STOVE |
| **Display stove status** | The first line displays the operating conditions, the second line for how long the pellets have been loading and the third line the smoke and room temperatures detected by the sensors. A list of the readouts which appears on the display:<br>**PUL** Clean grate<br>**ALF 1** Pressure switch activated<br>**ALF 2** Pressure switch fault<br>**ALC** Safety thermostat activated<br>**NO CONN** Smoke sensor disconnected<br>**NO ACC** Failed ignition<br>**MASS TEMP** Smoke alarm activated - maximum temperature reached<br>**MAX VENT** Room fan at maximum<br>**00. 0CO** Auger fault. | PUL<br>02.4C0<br>095°C 26°C<br>DT2040071-05 |

English

## 6.16 MODIFYING THE TRANSMISSION UNIT

Should two pellet stoves of the same model be installed close to each other and the remote control beam activates both simultaneously, it is possible to modify the transmission unit when the stove has been shut down by taking the following steps:

| SELECT UNIT | | |
|---|---|---|
| **Function** | **Action** | **Display** |
| **Select UNIT function** | Open the flap and press the SET and OPT keys simultaneously. Using the SELECT MENU key choose one of the eight transmission units (0÷7). Standard setting on pellet stoves is 0. | SELECT<br>UNIT 2 |
| **Restart stove** | Disconnect the power cable. Reconnect it and within five seconds press the ON/OFF key, keeping it pressed down for approx. 3 - 4 seconds.<br>An audible beep indicates the successful change of unit.<br>Two display pages will appear in sequence while the remote control will return to the initial display. | SEARCH<br>FIELD<br><br>UNIT 2<br>LOADED |
| ⚠ **Unit storage remains as set even without batteries.** | | DT2040072-04 |





## 6.17 'MULTIFUOCO' SYSTEM OPERATION

The pellet stove with '**Multifuoco System**' is fitted with one/two fans for the circulation of hot air according to the model.
This system allows several solutions for the distribution of ducted hot air, so that the user has freedom of choice as regards the number of adjoining rooms which can be heated.
Operation of the '**Multifuoco System**' will be explained in general and conceptual terms below.
In order to adjust the fan to suit the chosen ducting solution, three '**Multifuoco System**' speed settings have been pre-programmed, which appear as **01**, **02**, **03** in the bottom line of the display and as small rectangles from 1 to 3 in the top line.
There is a greater volume of air transferred by the fan passing from speed setting **01** to **03**.
Once the '**Multifuoco System**' speed has been set, the user can choose a higher or lower amount of heat by selecting one of the four power settings on the stove: **P1**, **…**, **P4**.
Similarly, there is a greater quantity of hot air produced by the stove passing from power setting **P1** to **P4**.

It is at the user's discretion, based upon experience and familiarity in using the product, which of the 'Multifuoco' speed settings and which power level to choose.
These choices will be based on the length of the ducting and the required room temperature (as an indication, the longer the ducting the higher the **Multifuoco System** speed setting).

For each of the solutions described in the INSTALLATION section under "**MULTIFUOCO SYSTEM**", there is a specific **Multifuoco** fan setting recommended.
If opting for **SOLUTION 1**, it is best to use the control panel to select the speed setting "**01**".
If opting for **SOLUTION 2**, a higher fan speed will be required, in which case it would be best to select the speed setting "**02**" on the control panel.
Finally, if opting for **SOLUTION 3**, an even higher fan speed will be required, in which case it would be best to select the speed setting "**03**" on the control panel.
To select the required **Multifuoco** setting, refer to the paragraph "**STARTUP AND NORMAL OPERATION**".

## 6.18 SAFETY DEVICES

⚠ **During operation some parts of the stove (door, handle, ceramic parts) can reach high temperatures.**

Remember to maintain the safety distances indicated previously.
Be careful, **take all due precautions** and always comply with the instructions.
If during operation smoke leaks from any part of the stove or the flue, shut the stove down immediately and ventilate the room. When the stove has cooled, check for the cause of the leak and if necessary call in specialist personnel.
The stove is fitted with several safety devices to guarantee safe operation.

⚠ **The safety devices are fitted to eliminate the risk of injury to people and pets and damage to property. Tampering or work carried out by unauthorised personnel can jeopardise this function.**

A list of warnings that could appear and instructions on what to do is given below.

| SMOKE CHAMBER PRESSURE | |
|---|---|
| **Description** | **Display** |
| A pressure switch is connected to the flue gas outlet; its function is to control the vacuum inside the outlet duct so that the stove can be used in all safety. | |
| The readout "**SAFETY SMOKE**" appears on the display.<br>The causes could be that the correct operating conditions inside the flue gas outlet duct have been altered (poor installation, presence of obstructions or obstacles in the outlet duct, careless maintenance, unfavourable weather conditions such as persistent wind, etc.) or that a fault in the pressure switch has been detected.<br>The warning buzzer activates after approx. 60 seconds (if set). | SAFETY<br>SMOKE<br>12:00 22°C |
| Shut down the stove by holding the ON/OFF key down for several seconds.<br>The alarm stops.<br>Access the STOVE STATUS menu and check the type of fault that has been detected.<br>The readout "**ALF 1**" or "**ALF 2**" could appear (see causes under "**TROUBLESHOOTING**").<br>Wait until the stove has cooled down, then check for and remove whatever has caused the safety device to be triggered or contact the After-Sales Service Centre. | |
| ⚠ **Empty out and clean the grate before setting a new ignition cycle.** | DT2012314-00 |

| PELLET HOPPER TEMPERATURE | |
|---|---|
| **Description** | **Display** |
| A sensor with automatic reset is located on the pellet hopper; its function is to prevent excessive temperature ranges. | |
| The readout "**SAFETY THERMAL**" appears on the display.<br>If the pellet hopper temperature reaches critical levels, the thermostat cuts off the power supply to the fuel-loading auger, thereby stopping the supply of pellets to the grate and starting the stove shutdown process.<br>After approx. 60 seconds the warning buzzer sounds (if activated). | SAFETY<br>THERMAL<br>12:00 22°C |
| Shut down the stove by holding the ON/OFF key down for several seconds.<br>The alarm will stop.<br>Access the STOVE STATUS menu where the readout "**ALC**" appears (see causes under "**TROUBLESHOOTING**").<br>Wait until the stove has cooled down, then check for and remove whatever has caused the safety device to be triggered or contact the After-Sales Service Centre. | |
| ⚠ **Empty and clean the grate before setting a new ignition cycle.** | DT2012315-00 |

English

| FLUE GAS TEMPERATURE SENSOR | |
|---|---|
| **Description** | **Display** |
| A sensor positioned at the flue gas outlet and connected to the PCB constantly monitors the working temperature allowing the stove to be used in all safety. | |
| The readout "**SAFETY STOVE**" appears on the display.<br>If the flue gas temperature exceeds the fixed safety limit, the power supply to the fuel-loading auger is cut off thus depriving the grate of pellets and starting the stove shutdown process.<br>After approx. 60 seconds the warning buzzer sounds (if activated). | SAFETY<br>STOVE<br>12:00 22°C |
| Shut down the stove by holding the ON/OFF key down for several seconds.<br>The warning buzzer stops.<br>Access the STOVE STATUS menu and the readout "**MASS TEMP**" appears (see causes under "**TROUBLESHOOTING**").<br>Wait until the stove has cooled down, then check for and remove whatever has caused the safety device to be triggered or contact the After-Sales Service Centre. | |
| The readout "**PROBE SMOKE**" appears on the display.<br>This means that the sensor has been momentarily disconnected or accidentally dislodged or the connector has not been positioned correctly on the PCB.<br>After approx. 60 seconds the warning buzzer sounds (if activated). | PROBE<br>SMOKE<br>12:00 22°C |
| Shut down the stove by holding the ON/OFF key down for several seconds.<br>The warning buzzer stops.<br>Access the STOVE STATUS menu and the readout "**NO CONN**" appears (see causes under "**TROUBLESHOOTING**").<br>Call the After-Sales Service Centre. | |
| ⚠ **Empty and clean the grate before setting a new ignition cycle.** | DT2012316-00 |

| PELLET-LOADING AUGER SAFETY DEVICE | |
|---|---|
| **Description** | **Display** |
| The readout "**SAFETY AUGER**" appears on the display.<br>This means that a fault has been found with the continuous pellet feed from the auger during the operating phase.<br>After approx. 60 seconds the alarm sounds (if activated). | SAFETY<br>AUGER<br>12:00 22°C |
| Shut down the stove by holding the ON/OFF key down for several seconds.<br>The alarm stops.<br>Access the STOVE STATUS menu and the readout "**00. 0C0**" appears.<br>Call the After-Sales Service Centre. | DT2012317-00 |

| STOVE ROOM TEMPERATURE SENSOR | |
|---|---|
| **Description** | **Display** |
| A sensor is connected to the rear of the stove; it constantly monitors the temperature in the immediate vicinity of the stove to ensure that it can be operated in all safety. | |
| The symbol "**00**" appears on the display in place of the room temperature.<br>It means that the sensor has been momentarily disconnected or accidentally dislodged.<br>The problem does not require the immediate shutdown of the stove, which will continue to operate normally at the set power level. | LEVEL<br>P2<br>12:00 00°C |
| Put the sensor back in its proper position.<br>The room temperature appears again on the display. | DT2012318-00 |

English

## 6.19 OPENING THE DOOR

DT2011042-00

⚠ **During operation the door must remain closed. It is to be opened only when the stove has been shut down and cooled for the carrying out of maintenance.**

## 6.20 STOVE HUMIDIFIER

DT2012021-00

A humidifier tank is a standard part of the stove and is fitted inside the stove at the top in front of the pellet hopper.
To fill the tank with water, move the ceramic top plate forwards and insert the spout of the bottle provided in the kit into the tank through the slots in the top plate.
The tank can hold 200 ml water and is consumed in approx. 1 or 2 days depending on stove use.

⚠ **When refilling the humidifier do not exceed the maximum capacity, shown as MAX, otherwise the electrical parts of the stove could be damaged.**

Fig. 58

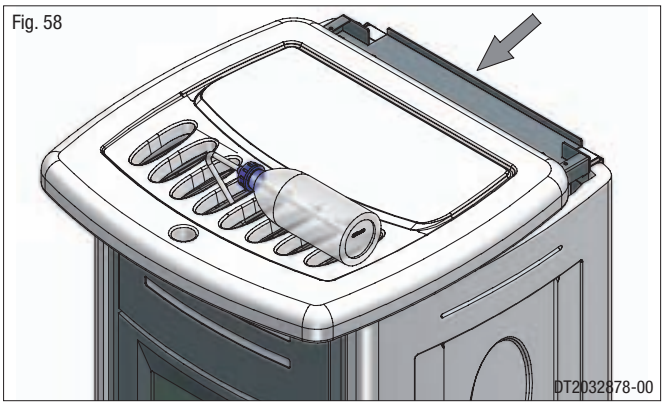


## 6.21 DISPOSAL OF ASHES

DT2010049-04

Ash from natural (non-treated) wood burned in stoves or open fireplaces is composed mainly of calcium, silicon, potassium and magnesium oxides. The ashes can therefore be used as a fertiliser for plants or in the garden, albeit not exceeding 2.6 kg per 10m$^2$ annually.

⚠ **The ashes should be placed in a metal container with a sealed cover. The sealed container should be placed on a non-combustible surface at a safe distance from combustible materials until the cinders have been completely extinguished.**

⛔ **Only when they have been fully extinguished can the ashes be thrown away with organic waste, assuming that nails or other non-organic material are not present.**

# 7.0 MAINTENANCE

DT2010249-01

Pursuant to current regulations on the safety of electrical equipment, you must contact a Piazzetta Group After-Sales Service Centre or a qualified electrician for all and any work connected with installation, maintenance or servicing that involves access to electrical parts.

Maintenance is to be considered compulsory for correct and efficient stove operation. If maintenance is not carried out with the recommended frequency, stove performance could suffer. The manufacturer will not be responsible for stove deterioration or malfunction if due to poor maintenance. All maintenance work (cleaning, any replacements, etc.) must be carried out when the stove is shutdown, completely cold and the supply cable disconnected.

English

⚠ **The frequency of cleaning depends on how much the stove is used and the quality of the fuel.**

DT2010057-02

## 7.1 CLEANING THE GRATE AND THE GRATE SUPPORT

DT2010089-05

Clean the grate area periodically (approx. once every two days) and whenever the stove is to be lit:
- remove the grate baffle plate and lift out the grate;
- remove any ash or other material that may have built up, taking particular care to free any clogged holes using a sharp pointed tool;
- make sure the “ignition hole”, located on the left side of the grate, is kept clean;
- check the grate support and remove any ash.

⚠ **After cleaning and before lighting the stove, check that the grate is correctly inserted and pushed towards the left. Refit the grate baffle plate.**

Fig. 59

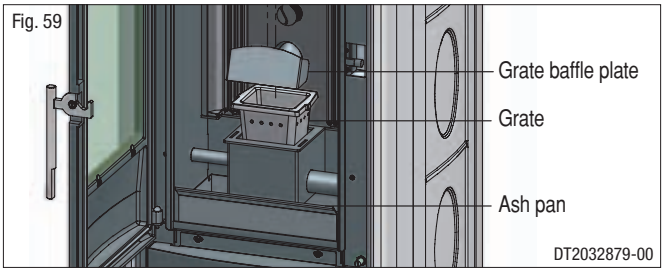


DT2032879-00

Fig. 60

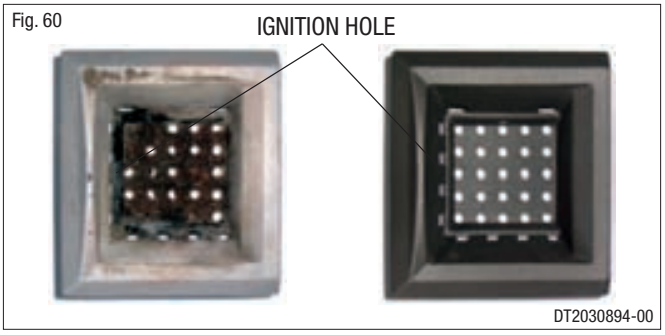


DT2030894-00

## 7.2 CLEANING THE ASH TRAY

DT2010100-03

Every two days, check the ash drawer to see if it needs emptying.
To dispose of the ashes, refer to the paragraph “**DISPOSAL OF ASHES**”.

## 7.3 CLEANING THE FIREBOX

DT2010428-03

Once a week clean the firebox as follows.
- Remove the grate baffle and draw out the grate.
- Turn the eccentric clamps to free the internal baffle.
- Lift the baffle slightly, gripping it by the two outer tabs to free it at the bottom and then turn it, bringing the bottom outwards, and remove.
- Using a vacuum cleaner remove the ash from the firebox.
- After having thoroughly cleaned the firebox, remount the internal baffle proceeding in the reverse order to above.
- Ensure that the tabs are properly inserted into the relative notches in the sides of the firebox and secure the baffle by turning the two eccentric clamps.
- Replace the grate, pushing it to the left and the grate baffle.

⚠ **This type of cleaning requires a vacuum cleaner suitable for holding ash.**

Fig. 61

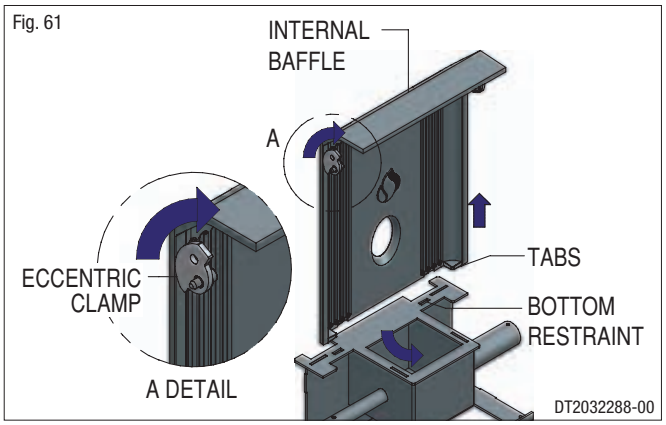


DT2032288-00

## 7.4 CLEANING THE SMOKE CHAMBER

DT2010127-03

Once a year clean the smoke chamber as follows:
- remove the screws which secure the smoke chamber cover, then lift it slightly and take it out by pulling it towards you (Fig. 62 - 63);

Fig. 62

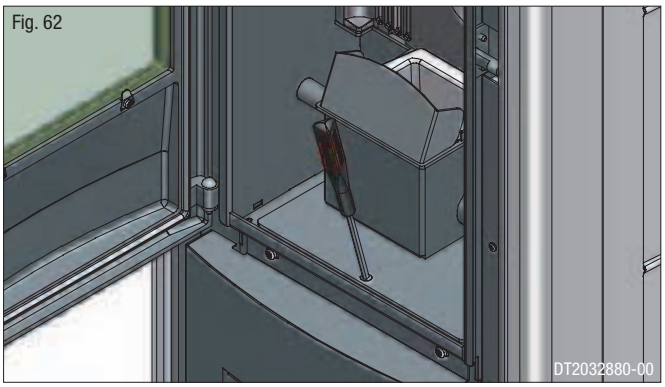


Fig. 63

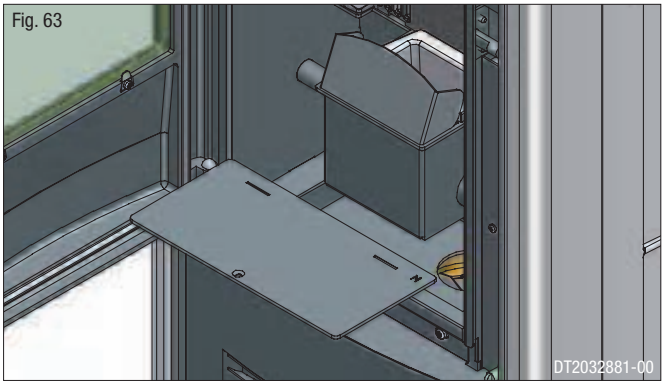


- use a vacuum cleaner to remove any ash and carbon deposits which can accumulate in the chamber, taking care not to damage the blades of the fan (Fig. 64);
- check the hole inside the smoke chamber on the left side (leading to the device for measuring the vacuum) for dust and ash and clean if necessary;
- after thorough cleaning, change the gasket and replace the smoke chamber closing element.

Fig. 64

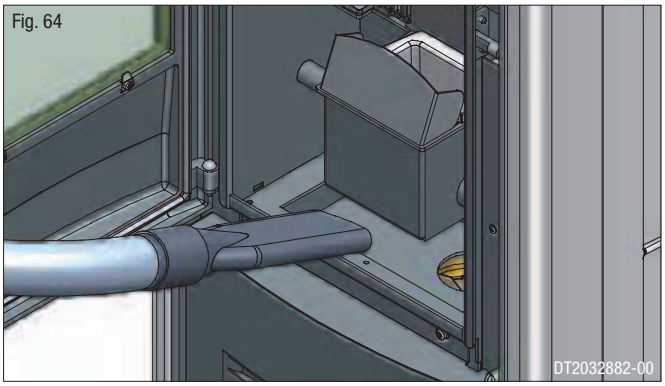


## 7.5 CLEANING THE FLUE SYSTEM

DT2010092-03

Until you have got reasonably used to the operating conditions of the stove, we recommend that this maintenance be carried out on a monthly basis.

Remove the plug from the Tee and clean the pipes.

If necessary, particularly on the first few occasions, we recommend calling in a qualified technician.

Fig. 65

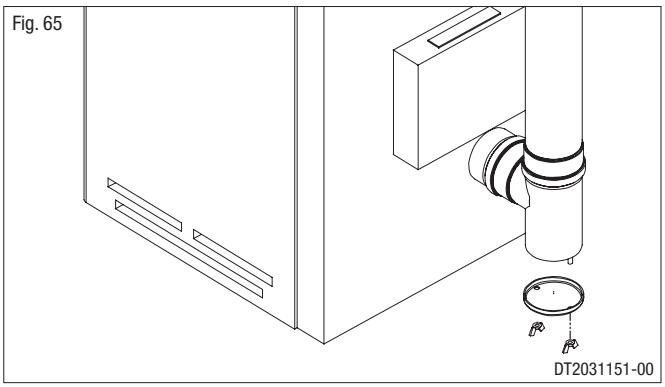


English

## 7.6 CLEANING THE CERAMIC CLADDING

DT2010059-03

The ceramic cladding must first be cleaned with a soft dry cloth before using any detergent (even mild detergent).
Products are available on the market which are suitable for cleaning ceramics as well as concentrated products for cleaning porcelain. These will remove oil, ink, coffee and wine stains, etc.

⛔ **Never soak the ceramic cladding or clean it with cold water when it is still hot as the thermal shock could cause it to crack.**

English

## 7.7 CLEANING THE ENAMELLED METAL PARTS

DT2010061-03

When cleaning the enamelled metal parts of the product use a soft cloth moistened with water

⛔ **Never clean metallic parts using alcohol, solvents, petroleum-based products, acetones or other degreasing or abrasive substances.**

In the event of such substances being used, the manufacturer will not be responsible for any damage caused.
Discolouration of metallic parts may be the result of misuse.

## 7.8 CLEANING THE GLASS (DAILY)

DT2010062-05

⚠ **The glass should be cleaned when cold using ammonia-based degreasing agents and not corrosive substances such as solvents.**

Although it is likely that tar will build up on the glass during the lighting stage, it will burn off with the stove in full operation.
If, however, the tar is left to build up over a long period it will require more effort to remove.
We therefore recommend that the glass be cleaned daily before lighting the stove.

⛔ **Do not use any material that could scratch or spoil the glass, as scratches may develop into cracks or breaks.**

## 7.9 REPLACING THE WINDOW

DT2010093-06

The stove is fitted with a 4 mm thick glass panel, resistant to thermal shock up to 750°C; the glass can only be broken by heavy impact or misuse.
Do not slam the door or hit the window.
In case of breakage replace only with a Gruppo Piazzetta spare part.
To replace, proceed as follows:
- wear protective gloves;
- remove the door and lie it flat;
- loosen the screws visible on the inside of the door;
- remove the frame and glass carefully;
- if the fibreglass seal and glazing bead have deteriorated, replace them;
- change the glass panel then replace the frame, tightening the screws carefully but not excessively;
- remount the door.

If other problems occur, consult your nearest retailer.

## 7.10 REPLACING THE REMOTE CONTROL BATTERIES

DT2010218-04

Slide the cover off the back of the remote control and replace the batteries with new ones ensuring that the (+) and (–) directions are correct.
The batteries must be of the type **AAA (LR03) 1.5V**.

⚠ **Rechargeable batteries are unsuitable for the remote control as they do not guarantee sufficient voltage for correct operation.**

Replace the back cover on the remote control.
The writing shown to the side appears on the display of the remote control.
A feedback procedure between the remote control and the receiver starts automatically.
After a few seconds the initial display returns.
In other words, stove status prior to changing the batteries will be displayed.
E.g.: if the stove was shut down, the display will appear as shown to the side.
The new batteries must be of the same type as above; failure to comply with these instructions could cause a risk of explosion.

**The old batteries must be disposed of properly in compliance with the applicable laws in force.**

Fig. 66

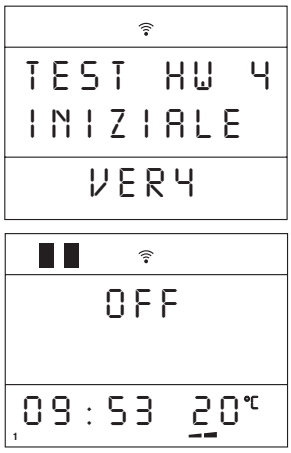


DT2010218-00

English

## 7.11 CLEANING THE FANS

DT2012390-00

⚠ **Any cleaning or maintenance work must be carried out after the CURRENT HAS BEEN SWITCHED OFF.**

The stove is fitted with fans (smoke extractor and room) positioned at the bottom and rear of the stove.
Any build-up of dust or ash on the blades can unbalance them resulting in noise during operation.
It is necessary to have the fans cleaned at least once a year.

⚠ **Since such a procedure involves dismantling certain parts of the stove, have the cleaning carried out only by a Piazzetta Service Centre or other qualified persons.**

To access the room fan/s, remove the side ceramic panel/s (see instructions in CLADDING booklet).
Remove the cover plate [A] screwed onto the external housing by loosening the screws. (Fig. 67)

Clean the fan/s (Fig. 68) then refit the cover plate [A] and the side ceramic panel/s.

Fig. 67

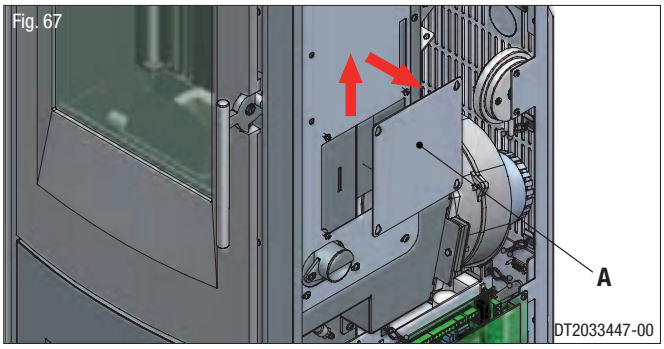


DT2033447-00

Fig. 68

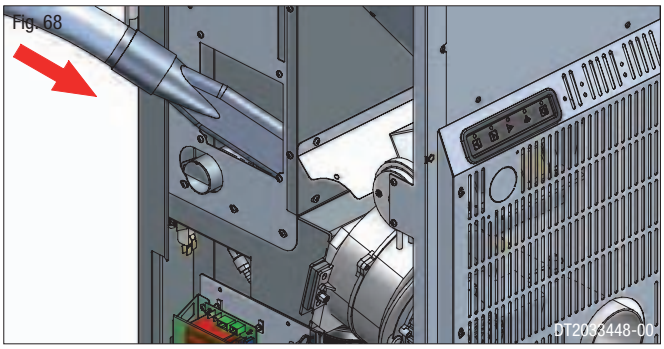

DT2033448-00

## 7.12 WHEN NOT IN USE

DT2011801-00

When shutting the stove down for the summer, proceed as follows:
- remove all pellets from the hopper and feeding auger;
- carefully clean the grate, the grate support and the ash drawer;
- using a steel brush, clean the baffle plate or internal baffle plates of the firebox and coat them using the spray paint, supplied on request, to prevent them from oxidising and consequently forming rust.

⚠ **If the cast-iron parts inside the firebox are not coated, rust could form. This is a natural process, which does not affect the efficiency and quality of the product.**

- Clean the flue thoroughly: contact a professional chimneysweep for this purpose;
- clean by removing all dust, cobwebs, etc. from the area behind the inner lining panels once a year, in particular the fans;
- disconnect the power cable from the power supply;
- remove the batteries from the remote control.

English

## 7.13 EXTRAORDINARY MAINTENANCE

DT2010097-03

The following maintenance should be carried out ONCE A YEAR and is necessary to ensure efficient and safe stove operation:
- clean the firebox thoroughly;
- clean and inspect the flue;
- check the condition of seals and gaskets;
- clean mechanical and moving parts (motors and fans);
- check electrical and electronic components.

# 8.0 TROUBLESHOOTING

⚠ **Some of the problems indicated below may be resolved by following the instructions. All work must be carried out when the appliance is cold and disconnected from the electricity supply (pull out the plug).**

⚠ **Authorised qualified persons must be contacted, in accordance with current regulations, whenever it is necessary to work on parts inside the cladding or the firebox in order to resolve the problem.**
**It is therefore recommended that only "Gruppo Piazzetta S.p.A." authorised Service Centres be contacted.**
**Whenever authorised Service Centre personnel carry out work, they must show an identity card issued by Gruppo Piazzetta S.p.A. on which the following are printed: name of the Service Centre, stamp and signature of the company and the period of validity of the actual document.**

⚠ **Unauthorised tampering with the appliance or the use of other than original spare parts not only creates situations of risk for operator safety, but invalidates the warranty and relieves the manufacturer from all liability.**

English

| Problem | Cause | Solution |
|---|---|---|
| The control panel display is not lit | The appliance is not powered | Check that the power cable is plugged into the wall socket and connected to the appliance |
| | Faulty power cable | Replace the power cable (use only original spares) |
| | Fuses blown | Check the fuses in both the plug and the electronic board, replacing them if necessary. If the problem persists call an electrician |
| | Faulty control panel | Replace the control panel (use only original spares) |
| | Faulty flat cable | Replace the flat cable (use only original spares) |
| | Faulty electronic board | Replace the electronic board (use only original spares) |
| Stove combustion gas safety device "ALF 1" stove status | Blocked flue or flue gas outlet | Check and clean the flue and the outlet |
| | Door open | Control if the door is closed |
| | Broken smoke extractor | Replace the motor (use only original spares) |
| | Flue system too long | Check correct installation |
| | Damaged door sealing gaskets | Check all the gaskets and seals of the door and flue pipe |
| | Hose connection blocked | Dismantle and clean the hose connection for the vacuum gauge |
| | Silicone piping blocked or broken | Check and/or replace piping |
| | Faulty electronic board | Replace the electronic board (use only original spares) |

English

| Problem | Cause | Solution |
|---|---|---|
| Pressure switch malfunction “ALF 2” stove status | Faulty pressure switch | Replace the pressure switch (use only original spares) |
| | No power supply to the auger | Check the electrical connections (contact a Piazzetta After-Sales Service Centre or an authorised person) |
| Thermal cutout “ALC” stove status (Hopper thermostat) | Blocked flue | Check and clean the flue |
| | Grate requires cleaning | Clean the grate (see section 7.1) |
| | Faulty thermostat | Replace hopper thermostat (use only original spares) |
| | Faulty electronic board | Replace the electronic board (use only original spares) |
| | Faulty fan | Check fan operation and replace if necessary (use only original spares) |
| “PUL” stove status | Momentary power failure during operation | The stove restarts automatically and continues operating normally at power level 2 |
| “NO ACC” stove status | Empty hopper | Fill the hopper |
| | Grate requires cleaning | Clean the grate (see section 7.1) |
| | Operating temperature not reached | Empty the grate and restart |
| | Faulty glow plug (igniter) | Replace glow plug (use only original spares) |
| | Faulty electronic board | Replace the electronic board (use only original spares) |
| Pellet-loading auger safety device “00. 0CO” stove status | Continuous operation of the auger motor | Replace the electronic board (use only original spares) |

| Problem | Cause | Solution |
|---|---|---|
| Stove safety device “MASS TEMP” stove status | Blocked flue or flue gas outlet | Clean the flue and the outlet |
| | Faulty electronic board | Replace the electronic board (use only original spares) |
| | Faulty limit temperature control sensor | Replace the control sensor (use only original spares) |
| | Badly positioned smoke sensor | Check that the sensor is correctly positioned (see wiring diagram) |
| | Incorrect parameter settings | Check parameter settings |
| Smoke sensor “NO CONN” stove status | No connection between the 2-pin terminal of the smoke sensor or the ambient and the electronic board | Check correct insertion/position of the connector (see wiring diagram) |
| | Faulty electronic board | Replace the electronic board (use only original spares) |
| | Badly positioned smoke sensor | Check that the sensor is correctly connected |
| Appliance runs for 9-10 minutes and then goes out | Heat sensor locked | Repeat ignition procedure. If the problem persists, contact an authorised technician |
| | Combustion gases have not reached the required ignition temperature | Repeat ignition procedure. If the problem persists, contact an authorised technician |
| | Heat sensor badly connected | Check the wiring and connections |
| | Blocked flue | Clean flue system |
| | Failed ignition | See “NO ACC” |
| | Faulty electronic board | Replace the electronic board (use only original spares) |
| | Pellet-charging system blocked | Empty the pellet hopper; check and clean the auger and chute |

English

⚠ **This instruction booklet contains all the necessary information for installation, operation and maintenance. Only call the Gruppo Piazzetta S.p.A. service centre after having scrupulously followed all the instructions.**

## 8.1 REPLACING THE FUSES

English

**Electronic board fuse.**
Unscrew the cartridge fuse or safety plug from the electronic board and replace with a similar one.
Motherboard fuse type: F4AL250V.

Fig. 69

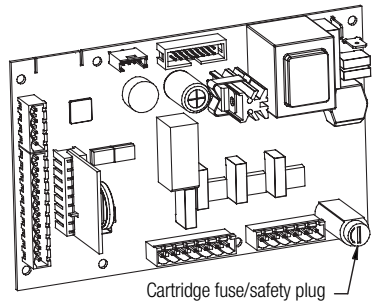


DT2032940-00

**Fuse on the IEC power socket.**
Draw out the fuse carrier and replace the fuse with the spare to be found inside the small drawer.
Type: F4AH250V

Fig. 70

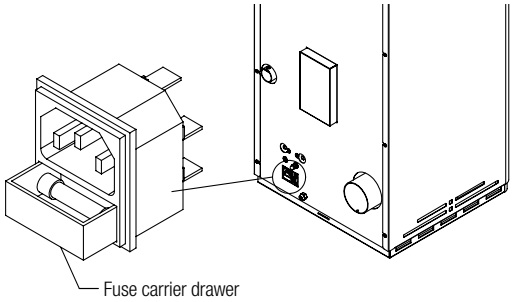


DT2030897-00

GRUPPO PIAZZETTA S.p.A.

PIAZZETTA

SUPERIOR

# DICHIARAZIONE DI CONFORMITA'
# *DECLARATION OF CONFORMITY*

English

Il sottoscritto, rappresentante il seguente costruttore
*The undersigned, representative of the following manufacturer*

**Gruppo Piazzetta S.p.A.**
**Via Montello, 22**
**31010 Casella D'Asolo (TV) – ITALY**

DICHIARA che l'apparecchiatura descritta in appresso:
*DECLARES that the product:*

| | |
|---|---|
| **Descrizione / *Description*** | **STUFA A PELLET** |
| **Modelli / *Models*** | **P958** |

**è conforme alle disposizioni legislative che traspongono le seguenti direttive:**
- **Direttiva 89/106/CEE (Prodotti da Costruzione)**
- **Direttiva 2006/95/CEE (Direttiva Bassa Tensione)**
- **Direttiva 2004/108/CEE (Compatibilità Elettromagnetica)**
- **Direttiva 99/5 CEE (Direttiva Apparecchiature Radio) e successivi emendamenti**

***is in accordance with the following Directives:***
- ***89/106/EEC Directive (Construction Products)***
- ***2006/95/EEC Directive (Low Voltage Directive)***
- ***2004/108/EEC Directive (Electromagnetic Compatibility)***
- ***99/5 EEC Directive (Radio Equipment Directive) and subsequent amendments***

e che sono state applicate tutte le norme e/o specifiche tecniche di seguito indicate
*and that all the following standards have been applied*

EN 55014-1 (2000) + EN 55014-1/A1(2001) + EN 55014-1/A2 (2002); EN 50366 (2003)
EN 61000-3-2 (2000) ; EN 61000-3-3 (1995) + EN 61000-3-3/A1 (2001)
EN 50165 (1997) + EN 50165/A1 (2001)
EN 60335-1:1994; EN 60335-1/Ec:1995; EN 60335-1/A11:1995; EN 60335-1/A1:1996; EN 60335-1/A13:1998; EN 60335-1/A14:1998; EN 60335-1/A15:2000; EN 60335-1/A2:2000; EN 60335-1/A16:2001.
ETSI EN 300 220-3 (2000)
ETSI EN 301 489-1 (2002) + ETSI EN 301 489-3 (2002)

Ultime due cifre dell'anno in cui è affissa la marcatura CE
*Last two figures of the year of the CE marking*

Luogo __Casella D'Asolo (TV)____
*Place*

Data 14 / 10 / 2010
*Date*

Firma
*Sign*
(nome e funzione)
*(name and title)*

COPIA – DT20100380-05

GRUPPO PIAZZETTA S.p.A.

PIAZZETTA

SUPERIOR

English

# DICHIARAZIONE DI CONFORMITA'
# *DECLARATION OF CONFORMITY*

Il sottoscritto, rappresentante il seguente costruttore
*The undersigned, representative of the following manufacturer*

**Gruppo Piazzetta S.p.A.**
**Via Montello, 22**
**31010 Casella D'Asolo (TV) – ITALY**

DICHIARA che l'apparecchiatura descritta in appresso:
*DECLARES that the product:*

**Descrizione / *Description*** **TRANSCEIVER UNIT**
**Modelli / *Models*** **MULTICOMFORT**

**è conforme alle disposizioni legislative che traspongono le seguenti direttive:**
- **Direttiva 89/106/CEE (Prodotti da Costruzione)**
- **Direttiva 2006/95/CEE (Direttiva Bassa Tensione)**
- **Direttiva 2004/108/CEE (Compatibilità Elettromagnetica)**
- **Direttiva 99/5 CEE (Direttiva Apparecchiature Radio) e successivi emendamenti**

***is in accordance with the following Directives:***
- ***89/106/EEC Directive (Construction Products)***
- ***2006/95/EEC Directive (Low Voltage Directive)***
- ***2004/108/EEC Directive (Electromagnetic Compatibility)***
- ***99/5 EEC Directive (Radio Equipment Directive) and subsequent amendments***

e che sono state applicate tutte le norme e/o specifiche tecniche di seguito indicate
*and that all the following standards have been applied*

ETSI EN 301 489-1 (2002) + ETSI EN 301 489-3 (2002)
ETSI EN 300 220-3 (2000)
EN 60950-1 (2001)

Ultime due cifre dell'anno in cui è affissa la marcatura CE
*Last two figures of the year of the CE marking*

Luogo __Casella D'Asolo (TV)____
*Place*

Data 14 / 10 / 2010
*Date*

Firma
*Sign*
(nome e funzione)
*(name and title)*

COPIA – DT20100383-03

## EUROPEAN REGULATIONS

DT2010382-05

This product “Pellet Stove P958” with Multicomfort has been designed, tested and manufactured according to the European R&TTE Directives 1999/5/EC.
Following these Directives, this product can be installed in the following countries:

| | | | | | | | |
|---|---|---|---|---|---|---|---|
| **(BE)** | Belgium | **(IRE)** | Ireland | **(PT)** | Portugal | **(DE)** | Germany |
| **(DK)** | Denmark | **(IT)** | Italy | **(FI)** | Finland | **(CH)** | Switzerland |
| **(GR)** | Greece | **(LU)** | Luxembourg | **(SE)** | Sweden | | |
| **(ES)** | Spain | **(NL)** | The Netherlands | **(UK)** | Great Britain | | |
| **(FR)** | France | **(AT)** | Austria | **(NO)** | Norway | | |

English

## REFERENCE STANDARDS

DT2010209-05

EN 14785 . . . . . .Residential space heating appliances fired by wood pellets - Requirements and test methods.
EN 832 . . . . . .Thermal performance of buildings - Calculation of energy use for heating - Residential buildings
UNI 10683 . . . . . .Heat generators fired by wood or other solid biofuels - Installation requirements
UNI 10847 . . . . . .Single flue systems for liquid and solid fuel generators - Maintenance and inspection - Guidelines and procedures
UNI 7129 . . . . . .Gas installations for domestic use fired by mains gas supply - Design, installation and maintenance
DIN 51731 class HP2 . . . . . .Fuels.
ÖNORM M7135. . . . . .Fuels.
CEI EN 60335-1 . . . . . .Safety of household and similar electrical appliances - Safety. Part 1: General requirements
CEI EN 50165 . . . . . .Electrical equipment of non-electric appliances for household and similar purposes - Safety requirements
EN 1856-1 . . . . . .Chimneys - Requirements for metal chimneys - Part 1: System chimney products
EN 1856-2 . . . . . .Chimneys - Requirements for metal chimneys - Part 2: Metal liners and connecting flue pipes
EN 1443 . . . . . .Chimneys – General requirements

UK Product serial number, to be quoted when requesting service from the Gruppo Piazzetta After-Sales Service Centre.

Gruppo Piazzetta S.p.A. Technical Department - Cod. H07026300 / DT2000786 rev. 00 - (02/2011)

PIAZZETTA

GRUPPO PIAZZETTA S.p.A.

Via Montello, 22
31011 Casella d'Asolo (TV) - ITALY
Tel. +39.04235271 - Fax +39.042355178
www.piazzetta.it
e-mail:infopiazzetta@piazzetta.it